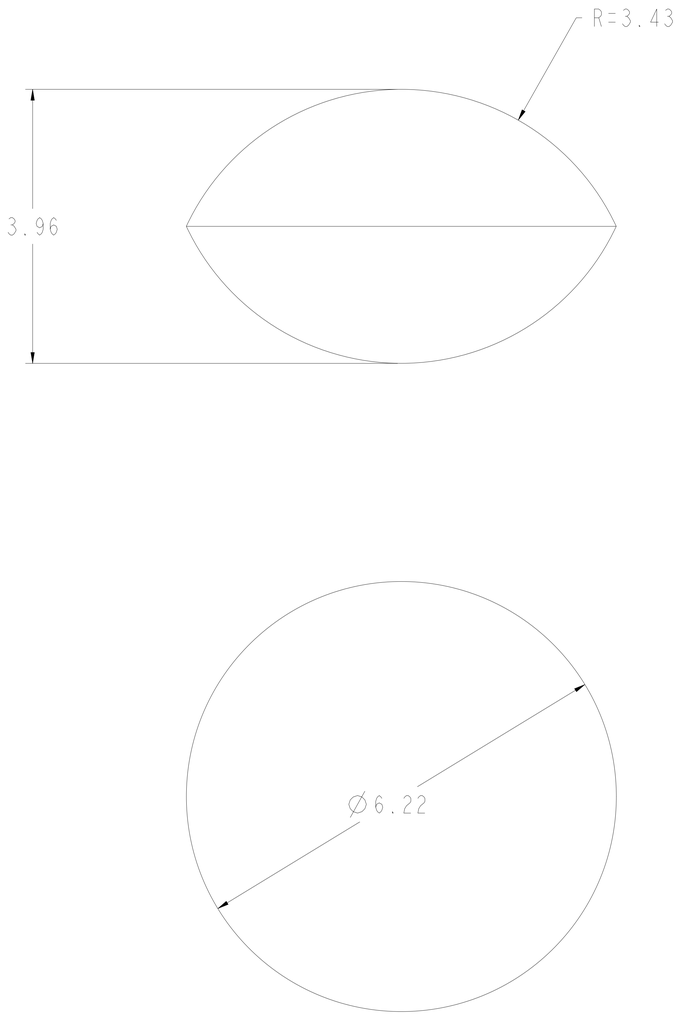

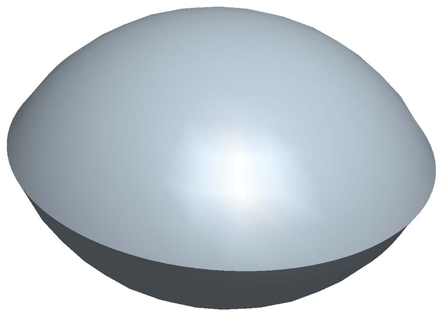

SCALE 30.000

SAMPLE SHAPE FOR SINGLE-TOROID ENCAPSULATING GASKET

ALL DIMENSIONS ARE IN mm