# ACCEPTANCE CRITERIA LISTING/TRAVELER

**Page** __1__ **of** __1__ **Number** ___**WG-**_____

**Originator:**

Name Dan Stout

E-mail __danstout@sns.gov

Phone ____865-387-2044

**Locations:**

☐ ANL ☐ BNL ☐ LANL ☐ LBNL ☐ ORNL ☐ JLAB

Group _____

Quantity _____32_____

Part Name _____Warm Girder

Part Number _____

Additional Remarks This ACL/Traveler is used to document receipt and inspection of the warm girder.

**Verification or Testing Requirements**

| ITEM NO | CHARACTERISTIC OR TEST TO BE CONDUCTED OR WITNESSED | VERIFYING ENTITY | NAME OR STAMP OF INSPECTOR / NCR/IDR NO. | DATE INSPECTED |
|---|---|---|---|---|
| 1 | **Unpack girder, visually inspect for damage**<br>**Record girder serial number:**<br>**Record BPM serial number:** | | | |
| 2 | **Check BPM feedthrough continuity. Scribe BPM feedthroughs for later matching, and record serial numbers of feedthroughs.**<br><br>**Top:**<br>**Bottom:**<br>**Left:**<br>**Right:**<br><br>**See sketch (convention is looking towards linac dump along beam line)** | | | |
| 3 | **Measure pipe concentricity, BPM orientation, and laser flang perpendicularity per QA procedure** | | | |
| 4 | **Other parts received:** | | | |

REQUIREMENTS APPROVAL:

**SNS ASD Rep.** **Date**

REQUIREMENTS APPROVAL:

**QA Rep.** **Date**

Use continuation sheet if needed

Completion data: ACL complete _____

Date_____ QAR initials

Form SNS-3
(10-99)

NEXT ASS'Y: FINAL ASS'Y:

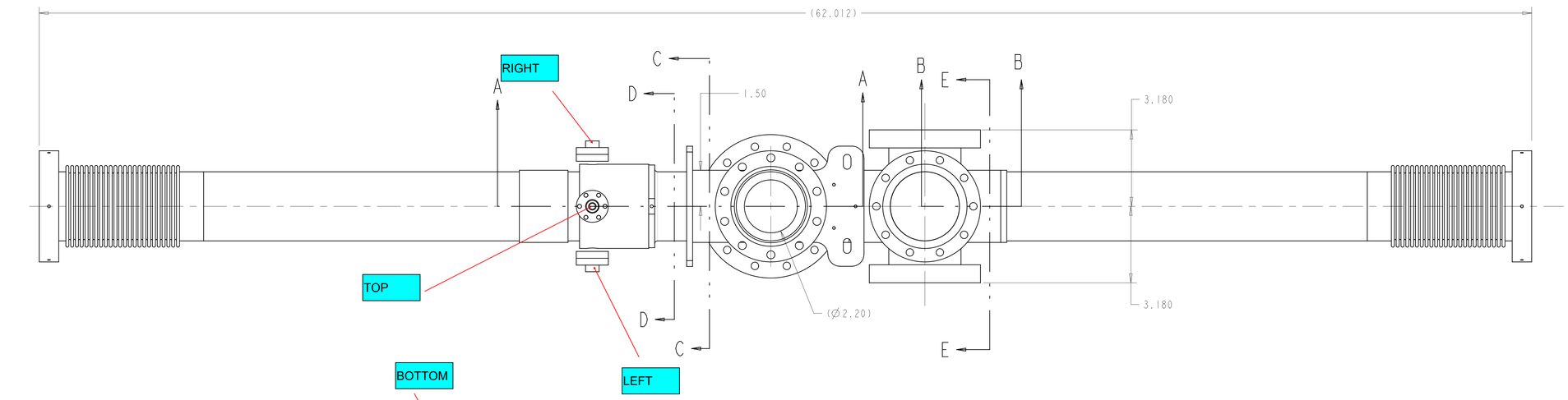


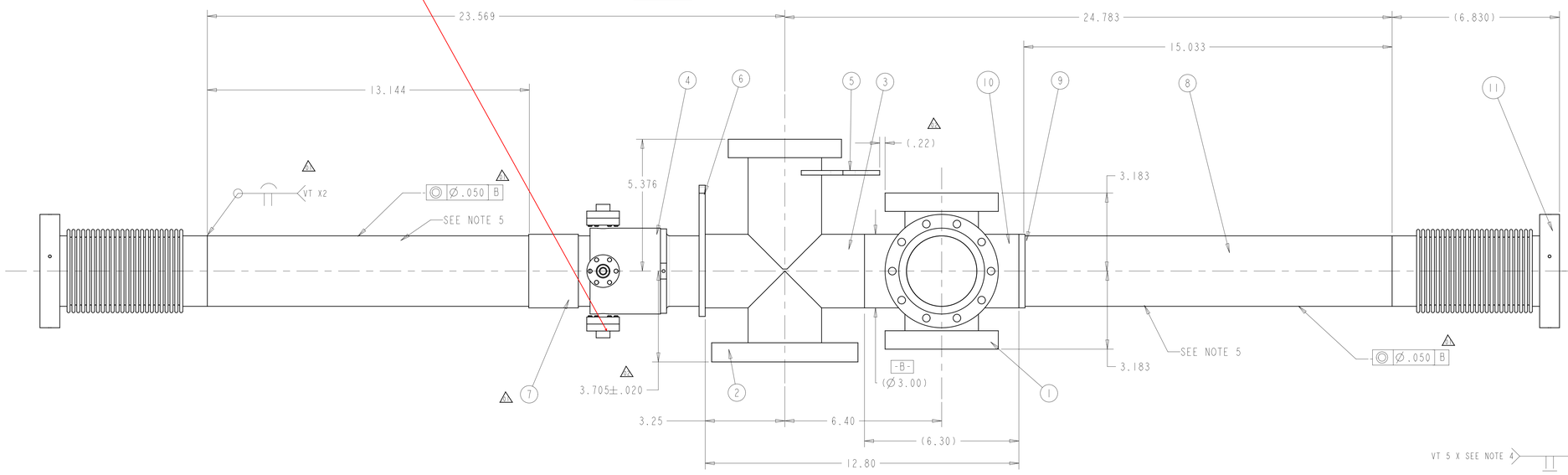


SCALE 0.5

NOTES

1. DIMENSIONS ARE IN INCHES.
2. BORE ITEM AFTER WELDING Ø ID 2.870 -0.00 +0.010 IF REQUIRED)
3. WELD STEEL PER AWS 1.1 OR ANY SNS APPROVED STANDAED.
4. FLANGE TO CROSS WELDING IS TYPICAL FOR (7 ) LOCATIONS.
5. USE SANITARY TUBING ASTM SPEC A269/A270.

BPM WELDING REQUIREMENTS

1. BEGIN WELDING AT ZERO CURRENT AND THEN SLOWLY INCREASE IT TO PROTECT BPM ELECTRODES.
2. THE HEAT FROM WELDING COULD RELAX THE BPM ELETRODE AND BREAK THE ELECTRICAL CONTACT. MINIMIZE THE HEAT INPUT THROUGH APPROPRIATE SINKING, AND CONFIRM TEMPERATURE STAYS BELOW (TBC C) THROUGH THE USE OF TEMPERATURE INDICATORS.
3. REVIEW PROPOSED WELDING METHOD WITH SNS PRIOR TO STARTING.

VACUUM NOTES:

ALL PARTS SHALL BE FABRICATE IN ACCORDANCE WITH GOOD VACUUM PRACTICE, WHICH SHALL AS A MINIMUM, SHALL INCLUDE THE FOLLOWING:

1. REMOVAL OF ALL CONTAMINATION E.G. SCALE, DIRT, GREASE AND OIL PRIOR TO FABRICATION.
2. USE OF ONLY WATER-SOLUBLE NON-SULFUROUS BEARING CUTTING OILS FOR MACHINING.
3. WASHING OF ALL PARTS WITH DETERGENT TO REMOVAL CUTTING OILS PRIOR TO FINAL WASHING AND RINSING WITH DE-IONIZED WATER.
4. HELIUM LEAK TESTING OF ALL FABRICATED PARTS WHICH SHALL SHOW NO DETECTABLE LEAK WHEN TESTED USING A MSLD PEAK TO A SENSITIVITY OF < 2 X 10-10 STD CC/SEC.
5. INDIVIDUAL WRAPPING OF ALL FINISHED PARTS USING UHV GRADE ALUMINUM FOIL AND SUBSEQUENT STORAGE IN A HEAT SEALED POLYETHYLENE BAG WITH DESICCANT PRIOR TO BEING PACKAGED FOR SHIPPING.
6. SPECIFIC WAVERS TO ANY OF THE ABOVE REQUIREMENTS CAN ONLY BE GRANTED BY THE SNS ASD VACUUM GROUP.

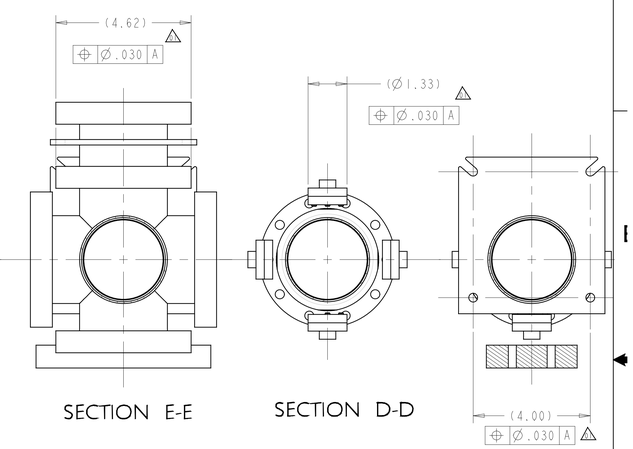


SECTION E-E SECTION D-D SECTION C-C

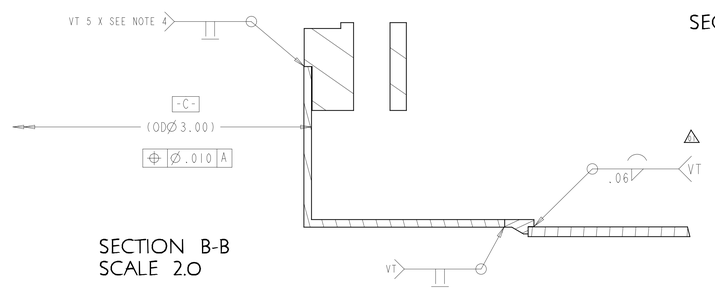


SECTION B-B
SCALE 2.0

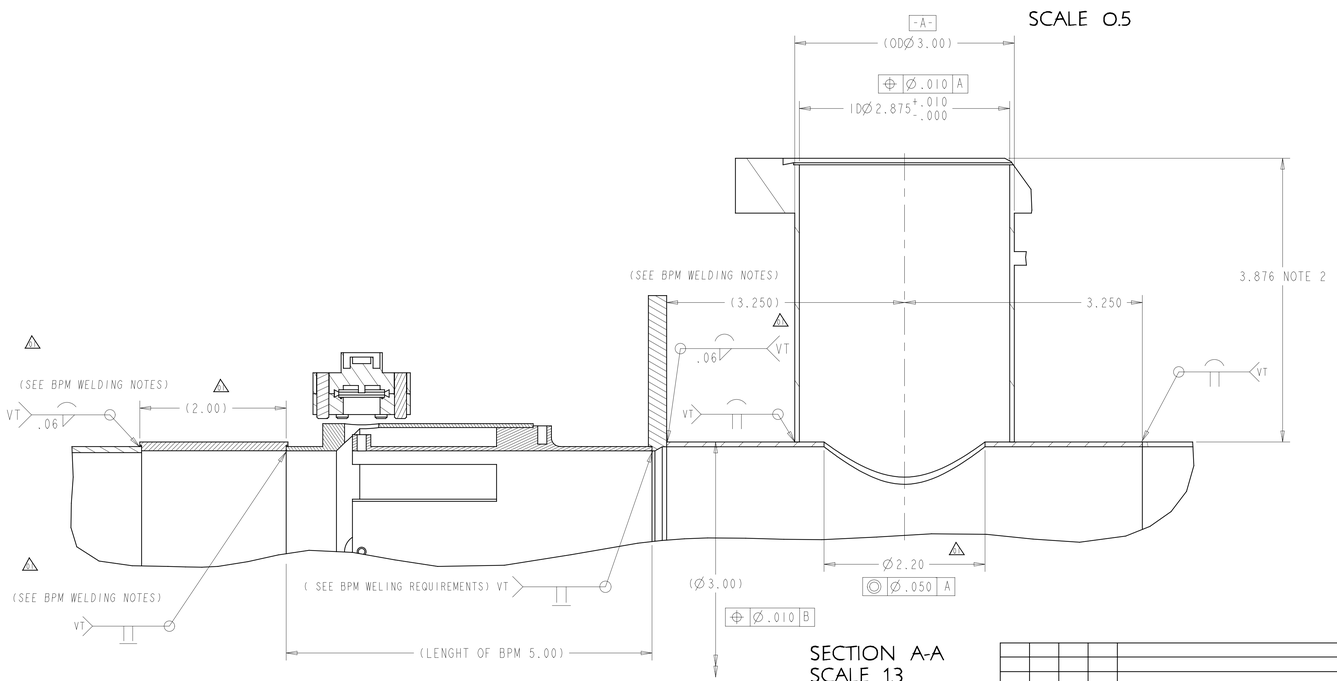


SECTION A-A
SCALE 1.3

| | | | | | | | |
|---|---|---|---|---|---|---|---|
| | 2 | | 10414000_M8C_8200_A119 | BELLOWS ASSEMBLY | | | 11 |
| | 1 | | | SIX WAY CROSS | 304 SS | MDC OR EQUIVALENT | 10 |
| | 1 | | 10414000_M8C_8200_A124 | ADAPTOR RING SUPPORT | 304 SS | | 9 |
| | 2 | | PIPE | PIPE | 304 SS | 2.875 OD SCH.5S | 8 |
| △ | 1 | | 104140000_M8C_8200_A148 | OD 3.0 X ID 2.760 | SS TUBING SEAMLESS 304 | -- | 7 |
| | 1 | | 104140000_M8C_8200_A104 | ADAPTOR PLATE/SUPPORT | 304 SS | --- | 6 |
| | 1 | | 104140000_M8C_8200_A087 | SUPPORT PLATE FOR MAGNET | 304 SS | -- | 5 |
| | 1 | | 104050000_18E_8200_A130_R01 | BPM 35.0 mM RADIUS | --- | LOS ALAMOS 155Y52013 | 4 |
| | 1 | | 404540 | 3 WAY CROSS | 304 SS | MDC OR EQU | 3 |
| | 1 | | 130025 | 6" OD CF FLANGE | 304 SS | MDC OR EQU | 2 |
| △ | 4 | | 110024_ | 4-5/8 CF FLANGE CLEARANCE | 304 SS | MDC OR EQU | 1 |
| 000000000M 8E8700A000 | - | CAGE CODE | PART OR IDENTIFYING NO | NOMENCLATURE OR DESCRIPTION | MATERIAL | SPECIFICATION | FIND NO |
| | | ← | NEXT ASSEMBLY | PARTS LIST | | | |

NO REPRESENTATION OR WARRANTY, EXPRESSED OR IMPLIED, IS MADE AS TO THE ACCURACY, COMPLETENESS OR USEFULNESS OF THE INFORMATION OR STATEMENTS CONTAINED IN THESE DRAWINGS, OR THAT THE USE OR DISCLOSURE OF ANY INFORMATION, APPARATUS, METHOD OR PROCESS DISCLOSED IN THESE DRAWINGS MAY NOT INFRINGE PRIVATE RIGHTS OF OTHERS. NO LIABILITY IS ASSUMED WITH RESPECT TO THE USE OF, OR FOR DAMAGES RESULTING FROM THE USE OF, ANY INFORMATION, APPARATUS, METHOD OR PROCESS DISCLOSED IN THESE DRAWINGS. DRAWINGS MADE AVAILABLE FOR INFORMATION TO BIDDER ARE NOT TO BE USED FOR OTHER PURPOSES, AND ARE TO BE RETURNED UPON REQUEST OF THE FORWARDING CONTRACTOR.

P THIS DRAWING PRODUCED ON PRO-ENGINEER

THIS DOCUMENT CONTROLLED BY
CHANGE CONTROL SYSTEM___XXXX___
SNS PROCEDURE___XXXX___

| REV | CHANGE TYPE | CHANGE CONTROL SYSTEM | CHANGE REQUEST NUMBER | DESCRIPTION | BY | CHK | SECT | DEPT | DATE | PE | REQ | DOE |
|---|---|---|---|---|---|---|---|---|---|---|---|---|
| △ 02 | | | | ECN 034 06/24/03 | AVD | | | ASD | | | | |
| △ 01 | | | | ECN 020 06/24/03 | AVD | | | ASD | | | | |

REVISION OR ISSUE PURPOSE — REVISION APPROVALS

SCALE AS NOTED

TOLERANCES UNLESS OTHERWISE SPECIFIED
FRACTIONS :
XX DECIMALS ±.04
XXX DECIMALS ±.005
ANGLES ±15'
BREAK SHARP EDGES .01 MAX
FINISH 125 RMS UNLESS OTHERWISE SPECIFIED

| | | DATE |
|---|---|---|
| DES | | 04/02/03 |
| DRW | AV DECARLO | 04/02/03 |
| CHK | : | : |
| L3 | : | : |
| L2 | : | : |
| | : | : |
| | : | : |
| | : | : |
| | : | : |
| | : | : |
| | : | : |
| | : | : |
| | : | : |

DRAWING APPROVALS — DATE

Oak Ridge National Laboratory
operated for the DEPARTMENT OF ENERGY under U.S. GOVERNMENT contract DE-AC05-00OR22725
Oak Ridge, Tennessee

Spallation Neutron Source

ASD COLD LINAC
INTERCRYOMODULE WARM SECTION
BEAM LINE CHAMBER

| BLDG | FL | SHT | OF | CLASS |
|---|---|---|---|---|
| | 3 | 1 | 1 | U |

104140000_M8C_8200_A123 — REV 02