REVISIONS						
ZONE	REV	DESCRIPTION	CHANGED BY	DATE	CLASS REVIEW	APPROVED
---	A	ORIGINAL ISSUE	-------	--------	NR	---
---	--	----------	-------	--------	NR	---

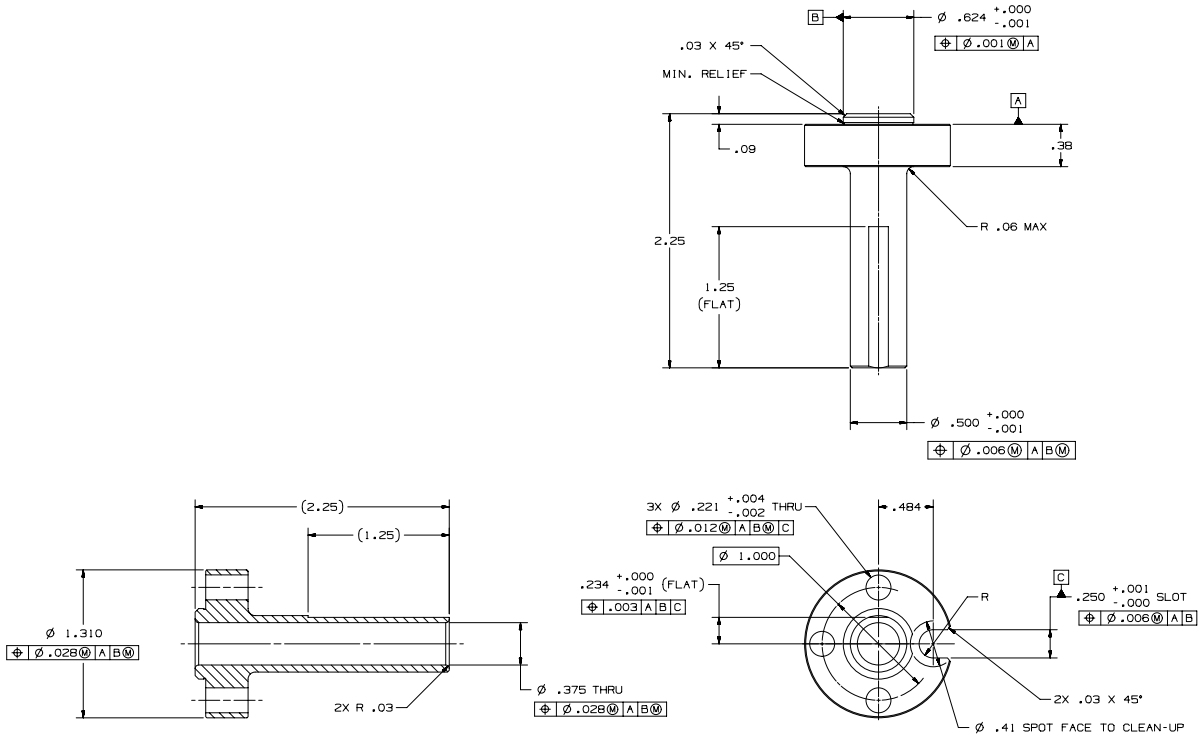

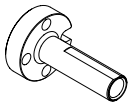

ISOMETRIC VIEW
SCLAE: NONE

NOTES: UNLESS OTHERWISE SPECIFIED:

101 ABBREVIATIONS PER ASME Y14.38-1999.

102 THOROUGHLY CLEAN PARTS TO REMOVE ALL OIL, GREASE, DIRT, CHIPS, ETC.

201 DIMENSIONING AND TOLERANCING PER ASME Y14.5M-1994.

208 REMOVE BURRS AND SHARP EDGES TO .010 MAX.

401 BAG AND TAG PART WITH DRAWING NUMBER AND REVISION.

QTY REQD	PART OR IDENTIFYING NO.	NOMENCLATURE OR DESCRIPTION	MATERIAL SPECIFICATION	ITEM NO
--	155Y520813	ACTUATOR BRACKET	304 SST	--

PARTS LIST/BILL OF MATERIAL

DRAWING LEVEL: PRODUCTION

UNCLASSIFIED

TASK CONTRACTOR

CAD SYSTEM & VER.: UNIGRAPHICS V18.0/IMAN

SEE FINAL DESIGN AUTHORIZATION SHEET FOR SIGNATURES; SHEET IS FILED BY DRAWING NUMBER AT THE SNS PROJECT OFFICE.

UNLESS OTHERWISE SPECIFIED: DIMENSIONS ARE IN INCHES. TOLERANCES ARE:

DECIMALS .X= ±.1 .XX= ±.01 .XXX= ±.005

ANGULAR= ±.25° MACHINED: 125 FINISH

APPROVALS		DATE	GROUP
DESIGNED	D. SATTLER	08-14-01	SNS-3
DRAWN	D. SATTLER	08-14-01	SNS-3
CHECKED	R. MEYER	07-17-02	SNS-3
ENGINEERING	R. MEYER	07-24-02	SNS-3
VACUUM	B. GILLES	07-24-02	LANCE-2
PHYSICS	M. PLUM	07-24-02	SNS-3
APPROVED	N. BULTMAN	07-24-02	SNS-3

NEXT ASSEMBLY USED ON	
155Y520818	155Y521905
155Y520812	155Y520821

APPLICATION

SNS DWG No. 104050000-I8D-8200-A813-R00

Los Alamos National Laboratory
Los Alamos, New Mexico 87545
SNS DIVISION

PROJECT: SNS

SNS DIAGNOSTICS
CCL, DTL, D-PLATE
WIRE SCANNER, SLIT
ACTUATOR BRACKET

SIZE	CAGE CODE	DWG NO. & CAD FILENAME	REV
D	88516	155Y520813	-A

SCALE 2/1 DO NOT SCALE SHEET 1 OF 1