REVISIONS						
ZONE	REV	DESCRIPTION	CHANGED BY	DATE	CLASS REVIEW	APPROVED
---	A	ORIGINAL ISSUE	-------	--------	NR	---
---	--	----------	-------	--------	NR	---

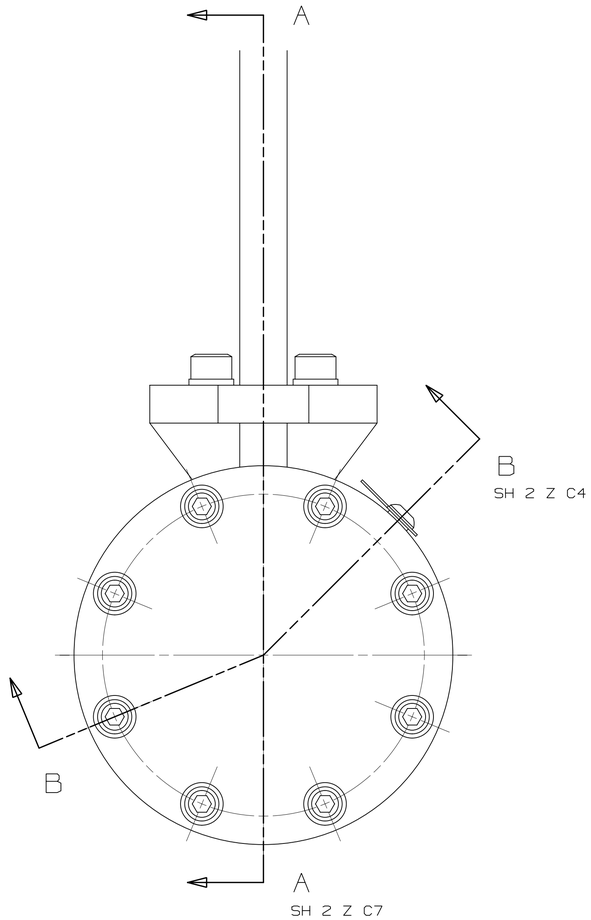

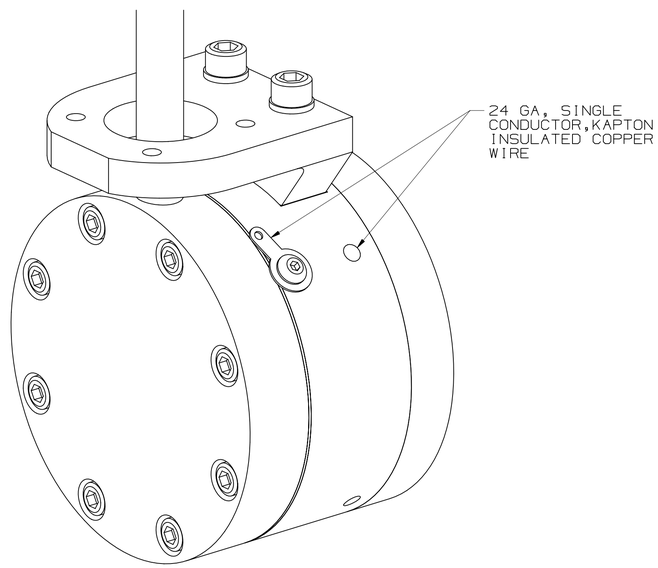

ASSEMBLY -6
SHOWN

QTY REQD	PART OR IDENTIFYING NO.	NOMENCLATURE OR DESCRIPTION	MATERIAL SPECIFICATION	ITEM NO
2		SCREW, SOCKET HEAD #8-32 UNC-2A X .875 LONG (VENTED)	STAINLESS STEEL	18
8		SCREW, SOCKET HEAD #6-32 UNC-2A X .75 LONG (VENTED)	STAINLESS STEEL	17
8		SCREW, FLAT HEAD #6-32 UNC-2A X 1.625 LONG (VENTED)	STAINLESS STEEL	16
1		SCREW, BUTTON HEAD #4-40 UNC-2A X .625 LONG (VENTED)	STAINLESS STEEL	15
1		LUG, SOLDER	COPPER	14
				13
1	155Y521895-3	DETAIL, INNER TUBE		12
1	155Y521894	DETAIL, SIGNAL INSULATOR		11
1	155Y521893	DETAIL, SPACER INSULATOR		10
1	155Y521892	DETAIL, RETAINING RING		9
1	155Y521891-11	DETAIL, ABSORBER		8
1	155Y521889	DETAIL, BIAS RING		7
1	155Y521888	DETAIL, BIAS RING INSULATOR		6
1	155Y521887	DETAIL, COLLECTOR INSULATOR		5
1	155Y521886	DETAIL, COLLECTOR - FLAT		4
1	155Y521885	DETAIL, UPPER MOUNTING BRACKET		3
1	155Y521884	WELDMENT HEAT EXCHANGER		2
1	155Y521883-11	DETAIL, MAIN BODY		1
	155Y521903	ASSEMBLY, FARADAY CUP DEGRADER		

PARTS LIST/BILL OF MATERIAL

PRELIMINARY
FOR INFORMATION OR REVIEW ONLY. DO NOT USE FOR PROCUREMENT OR FABRICATION. DRAWING CONTENT SUBJECT TO FUTURE CHANGE.

DATE 3-5-2002

NOTES: UNLESS OTHERWISE SPECIFIED
101 ABBREVIATIONS PER ASME Y14.38-1999.
102 THOROUGHLY CLEAN PARTS TO REMOVE ALL OIL, GREASE, DIRT, CHIPS, ETC.
201 DIMENSIONING AND TOLERANCING PER ASME Y14.5M-1994.
203 SURFACE TEXTURE PER ASME B46.1-1995.
204 ALL INSIDE CORNERS TO BE R.010 MAX.
206 C'SINK ALL TAPPED HOLES 100°, TO MAJOR DIA.
208 REMOVE BURRS AND SHARP EDGES TO .010 MAX.
401 BAG AND TAG PART WITH DRAWING NUMBER & REVISION LETTER.

DRAWING LEVEL: PRODUCTION

UNCLASSIFIED

TASK CONTRACTOR

CAD SYSTEM & VER. UG-V16.0.4

SEE FINAL DESIGN AUTHORIZATION SHEET FOR SIGNATURES.SHEET IS FILED BY DRAWING NUMBER AT THE SNS PROJECT OFFICE.

UNLESS OTHERWISE SPECIFIED: DIMENSIONS ARE IN INCHES.
TOLERANCES ARE:
DECIMALS .X= ±.1 .XX= ±.01 .XXX= ±.005
ANGULAR=±.25°
MACHINED FINISH 125

	APPROVALS	DATE	GROUP
DESIGNED	M. CATANACH	6-6-01	SNS-3
DRAWN	H. SALAZAR	8-8-01	SNS-3
CHECKED			
ENGINEERING	S. ELLIS	6-6-01	SNS-3
VACUUM			
PHYSICS			
APPROVED			

NEXT ASSEMBLY USED ON
APPLICATION

SNS DWG No. 104050000-I8E-8200-B882-R00

Los Alamos SNS DIVISION
Los Alamos National Laboratory
Los Alamos,New Mexico 87545

PROJECT SNS

DTL TANK 6
FARADAY CUP/DEGRADER
ASSEMBLY

SIZE	CAGE CODE	DWG NO. & CAD FILENAME	REV
D	88516	155Y521903	-A

SCALE 2/1 DO NOT SCALE SHEET 1 OF 2

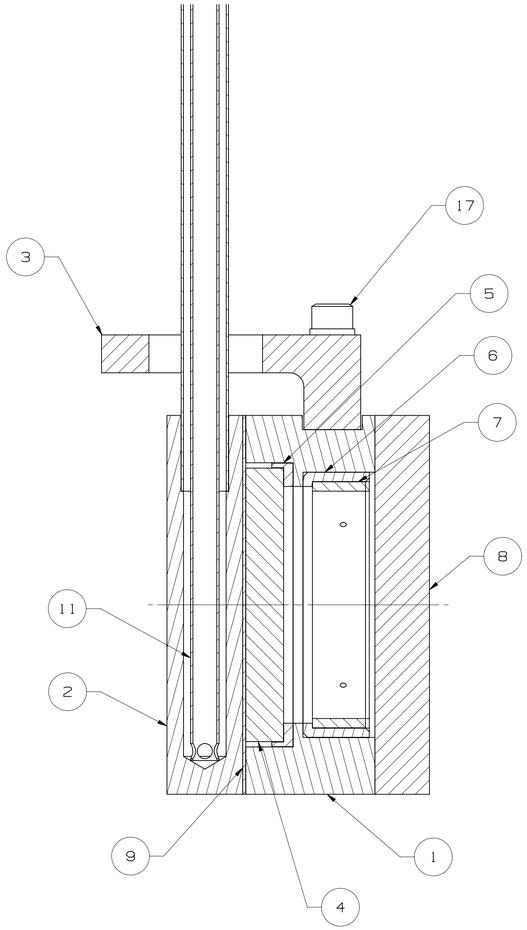

SECTION A - A

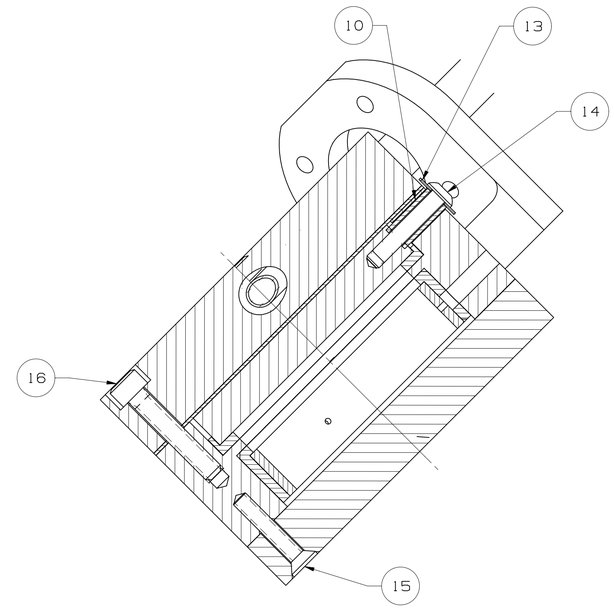

SECTION B - B

NOTES: UNLESS OTHERWISE SPECIFIED

101 ABBREVIATIONS PER ASME Y14.38-1999.
102 THOROUGHLY CLEAN PARTS TO REMOVE ALL OIL, GREASE, DIRT, CHIPS, ETC.
201 DIMENSIONING AND TOLERANCING PER ASME Y14.5M-1994.
203 SURFACE TEXTURE PER ASME B46.1-1995.
204 ALL INSIDE CORNERS TO BE R.010 MAX.
206 C'SINK ALL TAPPED HOLES 100°, TO MAJOR DIA.
208 REMOVE BURRS AND SHARP EDGES TO .010 MAX.
401 BAG AND TAG PART WITH DRAWING NUMBER & REVISION LETTER.

PRELIMINARY
FOR INFORMATION OR REVIEW ONLY. DO NOT USE FOR PROCUREMENT OR FABRICATION. DRAWING CONTENT SUBJECT TO FUTURE CHANGE.

DATE 3-5-2002

SNS DWG No. 104050000-I8D-8200-B903-R00

Los Alamos SNS DIVISION
Los Alamos National Laboratory
Los Alamos, New Mexico 87545

PROJECT: SNS

TASK CONTRACTOR

SIZE	CAGE CODE	DWG No.	REV
D	88516	155Y521903	-A

SCALE 2/1 DO NOT SCALE SHEET 2 OF 2