PARTS LIST		
PART NUMBER	NUMBER REQD	DESCRIPTION

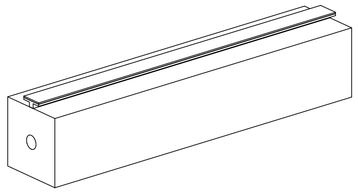

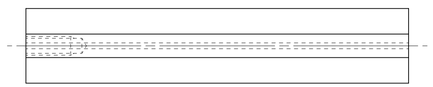

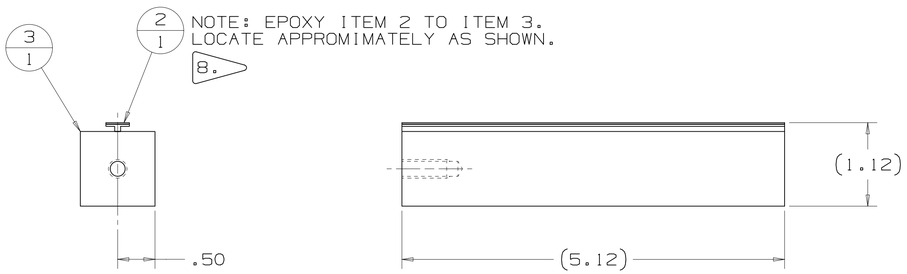

1 ASSEMBLY
4 REQD

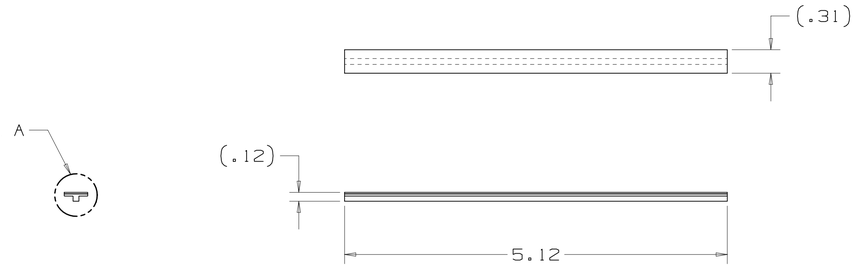

2
1
1 REQD
MATL: PANEL, 18 X 24 X .10 THICK
CIRCUIT BOARD WITH .02 THICK
COPPER BACK PLATE.
ROGERS GLASS MICROFIBER RT/6002
(SUPPLIED BY LANSCE-1)

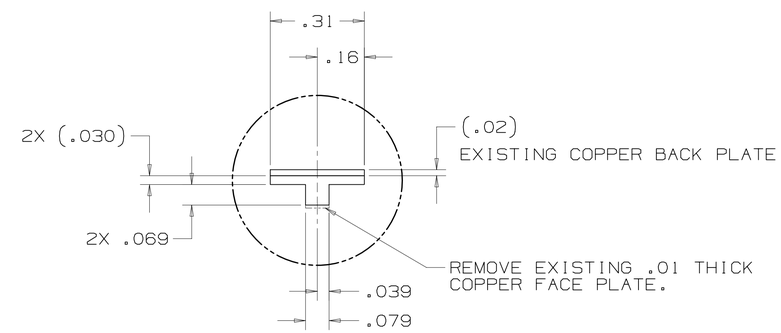

DETAIL A
SCALE: 4/1

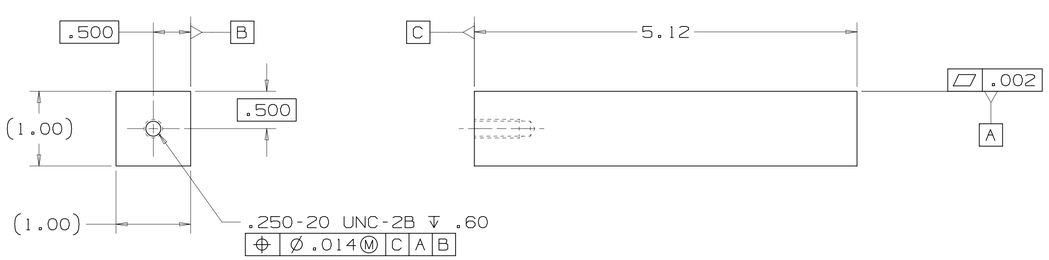

3
1
1 REQD
MATL: ALUM BAR, 1.00 SQUARE
ALUM ALLOY 6061-T6

8. USE ECCOBOND 45 BLACK EPOXY RESIN AND CATALYST 15 BLACK POLYAMIDE RESIN. MIX AND APPLY PER MANUFACTURES SPECIFICATIONS.

7. SURFACE TEXTURE PER ANSI/ASME B46.1-1985.
6. WELDING SYMBOLS PER ANSI/AWS A2.4-93.
5. DIMENSIONING AND TOLERANCING PER ASME Y14.5M-1994.
4. CSK 82° X .030 DEEP ALL DRILLED HOLES.
3. CSK 82° ALL TAPPED HOLES TO MAJOR DIAMETER.
2. BREAK ALL SHARP EDGES.
1. ALL DIMENSIONS ARE IN INCHES.
GENERAL NOTES: (UNLESS OTHERWISE NOTED)

© 1999 COPYRIGHT, UNIVERSITY OF CALIFORNIA
NO REPRODUCTION OR DISTRIBUTION AUTHORIZED WITHOUT EXPRESS WRITTEN CONSENT OF THE LOS ALAMOS NATIONAL LABORATORY

104050000-M8E-8200-A004

REVISION LETTER	CLASS REVIEW	REVISIONS	DATE	CHANGED BY	CHECKED BY	APPROVED BY
A	FES	DRAWING NUMBER WAS SK-AT1-529.	2-13-02	RJR		FES
	PLR	ORIGINAL ISSUE	—	—	—	—

Los Alamos
Los Alamos National Laboratory
Los Alamos, New Mexico 87545

/oot1snsl/chopper/chopper_proto/155y520004d01.prt

CLASSIFICATION OF DRAWING: UNC
PART: UNC TITLE BLOCK: UNC

TITLE
EPOXY TEST DEVICE
SNS CHOPPER

-SNS-

	SIGNATURE	DATE	GROUP
DRAWN	RJ ROYBAL	01-26-00	LANSCE-1
CHECKED			LANSCE-1
PHYSICS			LANSCE-1
PROJ. ENGR.			LANSCE-1
RELEASED			LANSCE-1

TOLERANCE-(UNLESS OTHERWISE NOTED)
X:± --- 0.XX ± .02 ANGULAR:± 0°30'
0.X:± --- 0.XXX:± .005 FINISH = 125

SCALE	TOTAL SHEETS	DRAWING NO.	SIZE	SHEET NO.
1/1	1	155Y520004	D	1

PLOT DATE 02-13-02