Lessons learned from PEP-II LLRF and Longitudinal Feedback

John D. Fox.

Themis Mastorides, Claudio Rivetta, Dmitry Teytelman, Dan Van Winkle, Jiajing Xu

Work supported by the U.S. Department of Energy under contract #DE-AC02-76SF00515

Talk Outline

History - PEP-II LLRF and Broadband Feedback

Original CDR Goals 1991

LLRF Design and Methodology

Longitudinal coupled-bunch Feedback Design and Methodology

Commissioning Experience

Major System developments/Upgrades during operations

What wasn't foreseen

Where we are today - (last year of operations)

Lessons Learned

Summary

PEP-II

Two rings of 2.2 km circumference. CDR 1991, updated 1993

- Goal of factory e+e- collider machine L 3E33
- e- HER 1.5A (0.75/1A 1993)
- e+ LER 2.14 A (2.14 A 1993)

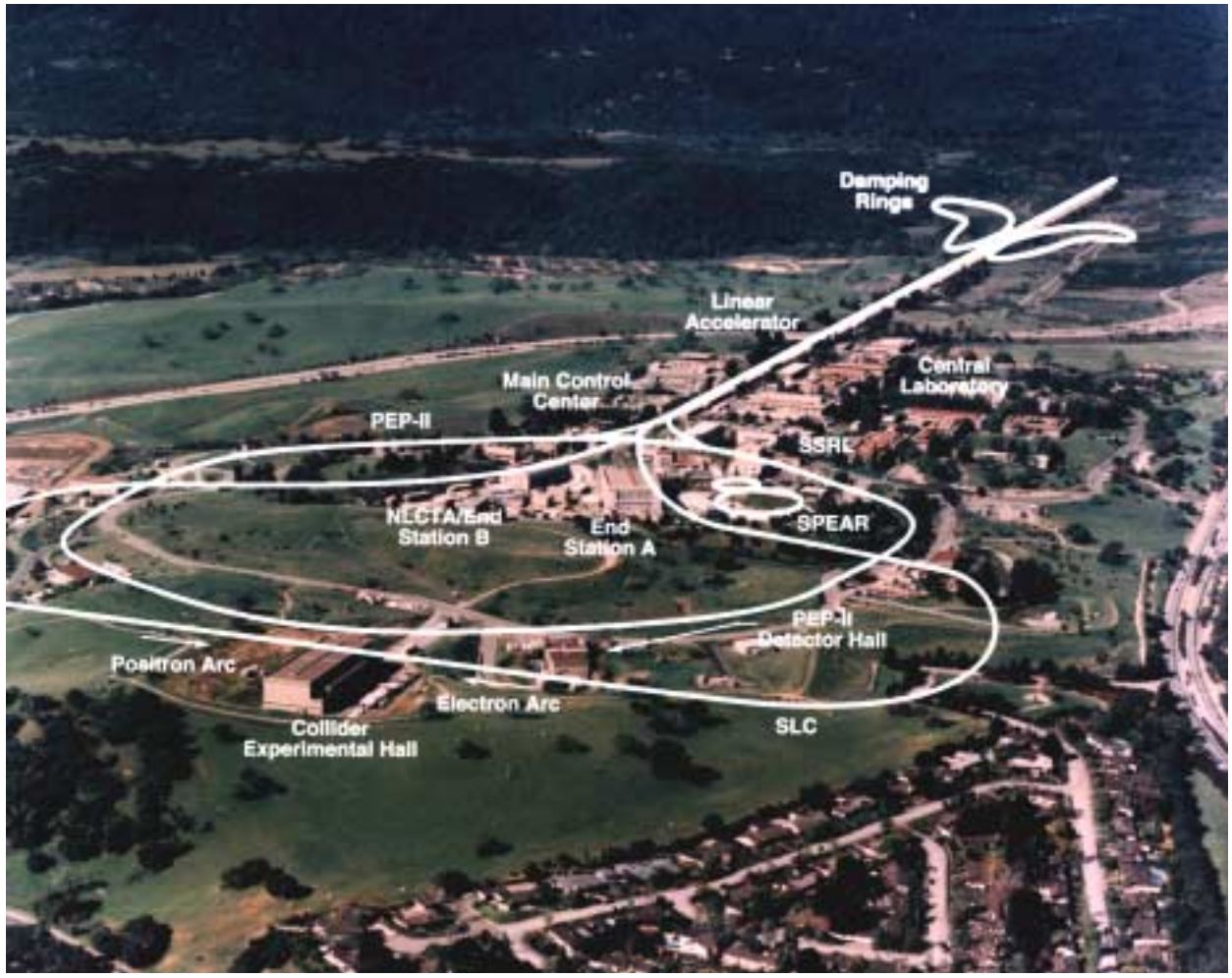

RF concerns

- High Beam Loading
- Impedance of cavity fundamental, detuning - low-mode coupled bunch instabilities
- Reliability -extensive R&D effort in Vacuum, Feedback and RF systems

Instability Concerns - operation well beyond stability thresholds in three planes

- HOM Impedances of cavities - HOM driven coupled-bunch instabilities
- HOM Dampers - Still the need for coupled-bunch fast feedback (238 MHz sampling rate)

PEP-II low-level RF feedback loops: Topology

Tuner loops - standard tuning for minimum reflected power

Klystron operating point support

- Ripple loop adjusts a complex modulator to maintain constant gain and phase shift through the klystron/modulator system.
- Klystron saturation loops maintain constant saturation headroom

Direct feedback loop (analog)

- Causes the station to follow the RF reference adding regulation of the cavity voltage
- Extends the beam-loading Robinson stability limit
- Lowers the effective fundamental impedance seen by the beam

Comb filter (digital)

- Adds narrow gain peaks at synchrotron sidebands to further reduce the residual impedance

Gap feedback loop (digital)

- Removes revolution harmonics from the feedback error signal to avoid saturating the klystron on gap synchronous phase transients

Longitudinal feedback uses RF as low-frequency “woofer” kicker

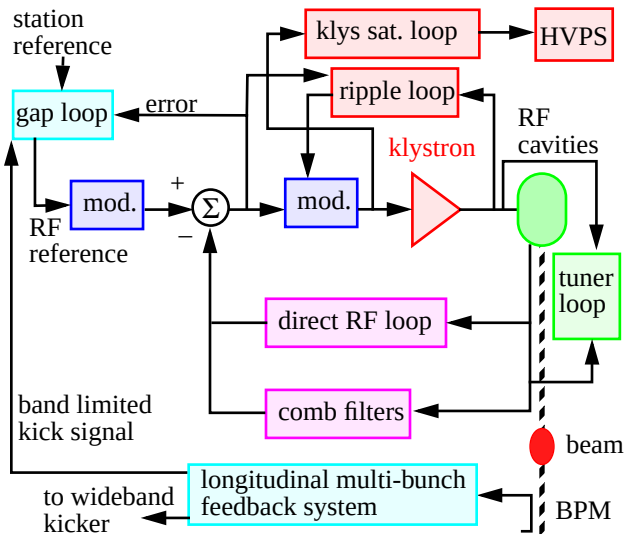

Loop technology

Tuner, Klys sat - EPICS
Comb. Gap, (ripple) - digital
Direct ,(Ripple) - analog

PEP-II RF Station, LLRF

Each Station

- 1.2 MW 476 MHz Klystron
- VXI-based LLRF electronics
- 2 or 4 RF cavities, with HOM loads
- HV power supply, Interlocks, etc.

How was necessary LLRF performance estimated?

LLRF -Origin and design/modelling F. Pedersen

- Linear frequency domain models
- Concerns about non-linear klystron, impact on impedance control

LLRF station model, beam model - time domain simulation

- Stuart Craig (Chalk River), Rich Tighe (SLAC)
- Macro-bunch structure, low-mode dynamics with Non-Linear Klystron
- No criteria for stability, robustness beyond trajectories in ms time windows

Design proceeded based on initial simulations. Little criteria for Noise, Dynamic range issues, I&Q mismatches, other technical imperfections

Prototype LLRF evaluated using PEP-I Klystron

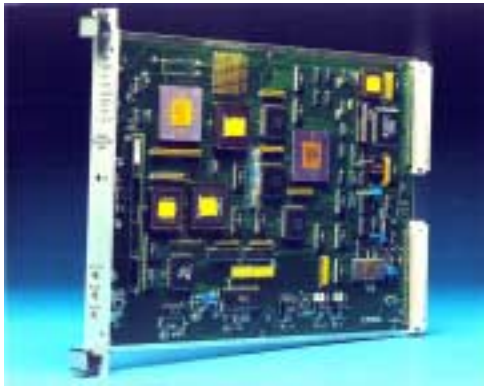

LFB Design

A DSP based flexible, programmable system (can run arbitrary FIR or IIR Filters)

Developed for PEP-II, ALS, DAΦNE (later BESSY-II, PLS and SPEAR). Multi-crate VXI/VME

Detection at $6 \times F_{RF}$, correction at 9/4 RF (options 11/4, 13/4)

Scalable VME processing array, up to $3.2 \cdot 10^9$ MAC/sec.

Sampling,A/D and D/A at 500 MHz

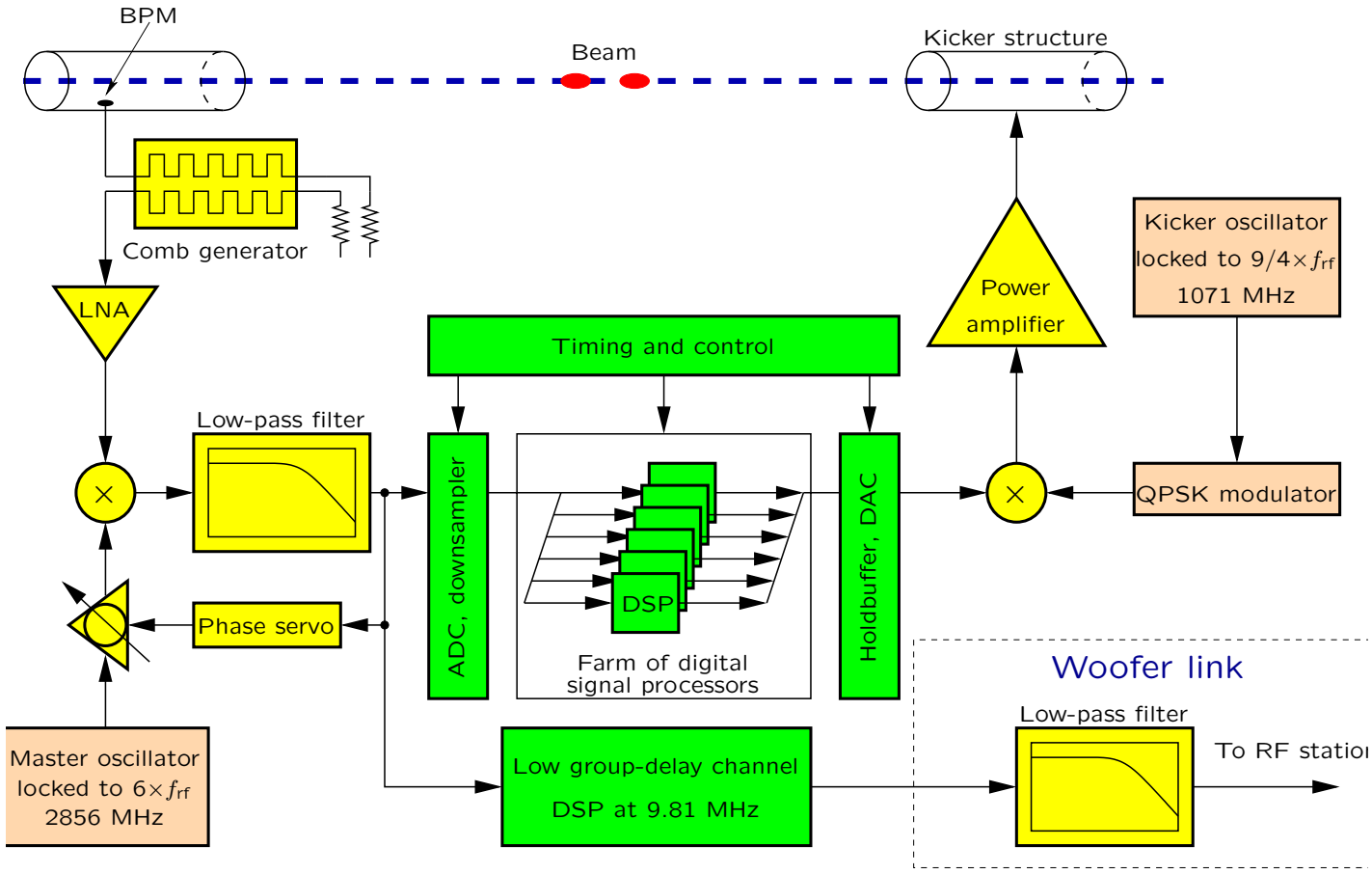

Downsampling to reduce computational load (match processing rate to synchrotron oscillation frequency). Original “woofer” taken at DSP farm D/A wideband output.

HER and LER Systems at PEP-II

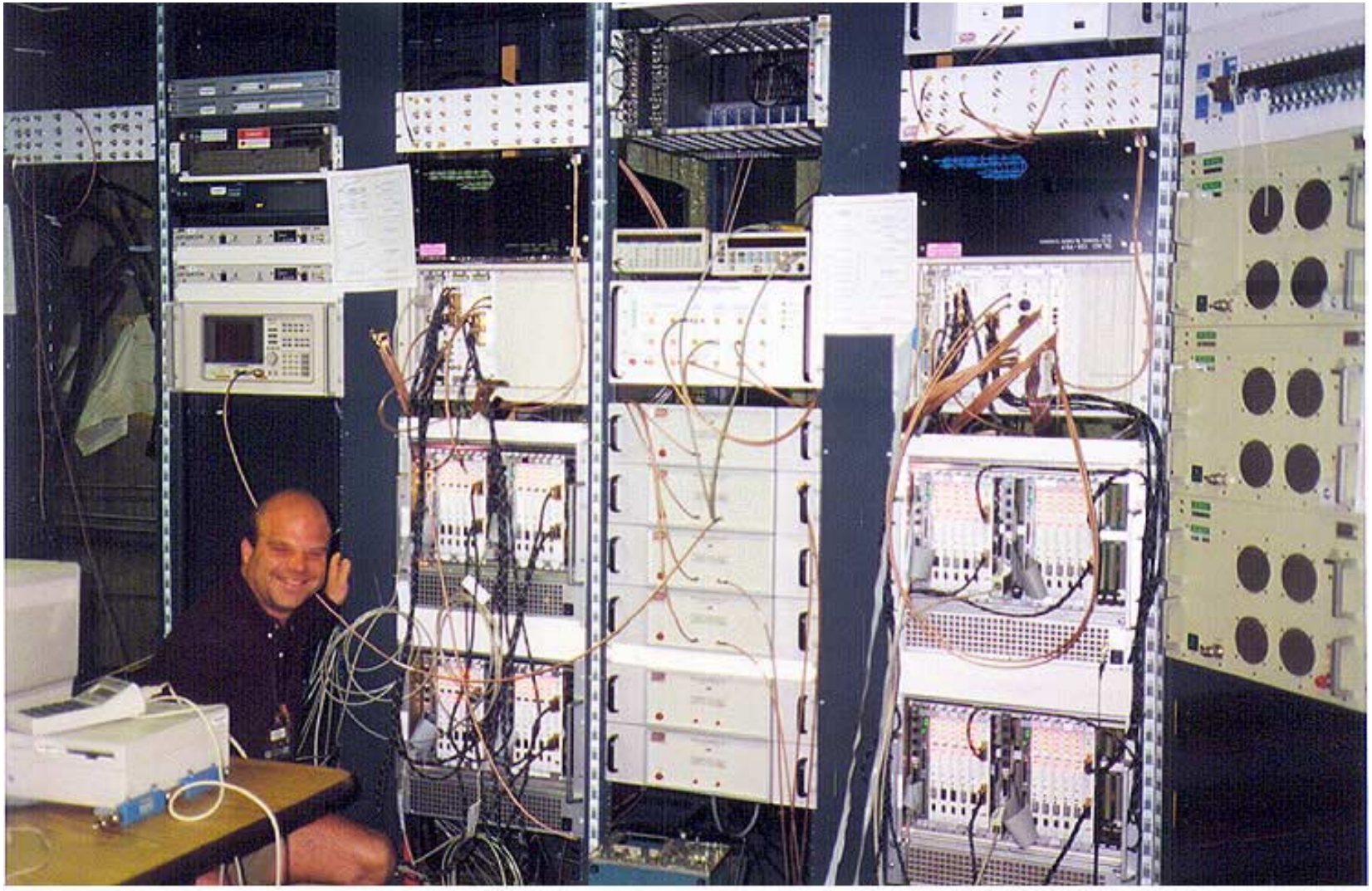

AY_008 HER and LER Electronics 10-4-97

How was necessary LFB performance estimated?

Time-domain Simulation (tracking, cavity HOM estimates, with downsampled FIR filter)

Beam tests - 1 bunch (SPEAR), ALS 4 processor “Quick Prototype”

Resolution of front end modelled and lab-tested

Required kicker power - estimated from injection error

Dynamics estimates- no estimation beyond simulation. Filter completely programmable

Thresholds- based on cavity HOM measurements/estimates

Beam-LLRF Simulations predict stable Low-mode behavior - LER issue at ultimate currents

Insurance policy - design in a low-mode “Woofer” channel

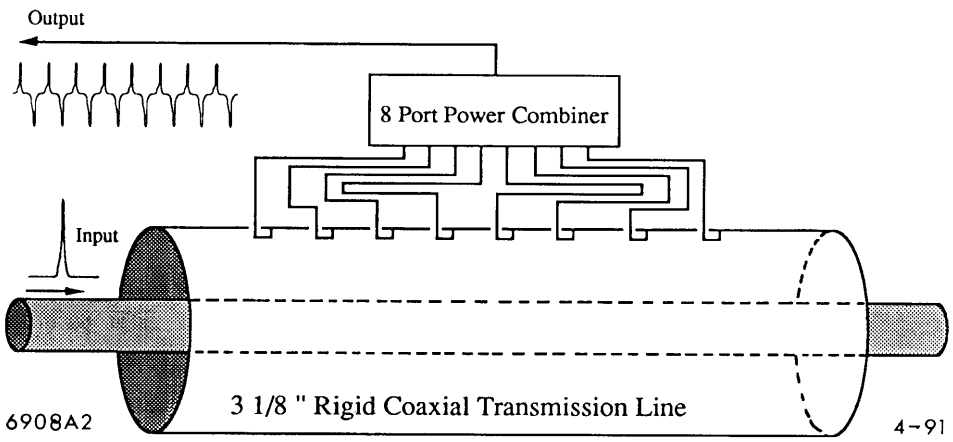

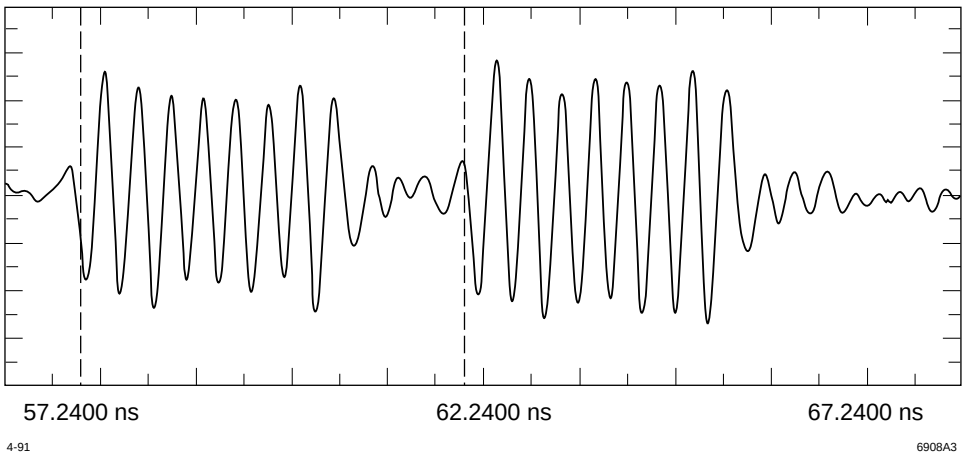

Features Anticipated and Implemented

LFB

programmable 80 processor DSP reconfigurable array

500 MS/sec. A/D, D/A, Downsampler - table driven 2 ns bucket spacing

Grow-damp dynamics measurements (via dual-port memory, codes)

monitoring functions (Signal MUX, RMS detectors front and back-end)

Woofer output

LLRF

Software controlled broadband (direct - analog) and comb (IIR digital) loops

Software based low frequency digital regulators via EPICS

Built-in network analyzer (via time domain excitation, response functions)

Fault files

Woofer input

The days of NIM Modules with Pots - are over. Software intensive systems, with VxWorks. GUI, etc.

Commissioning Experience LLRF

Issues with configurations of direct and comb loops -stations oscillating
Initial configuration method - network analyzer no beam, gain/phase margins
Instabilities (Station and/or Beam) at current
Spurious signals in RF output, klystron oscillations
manual tweaking of the direct and comb loops
trade-off of station stability vs. beam stability

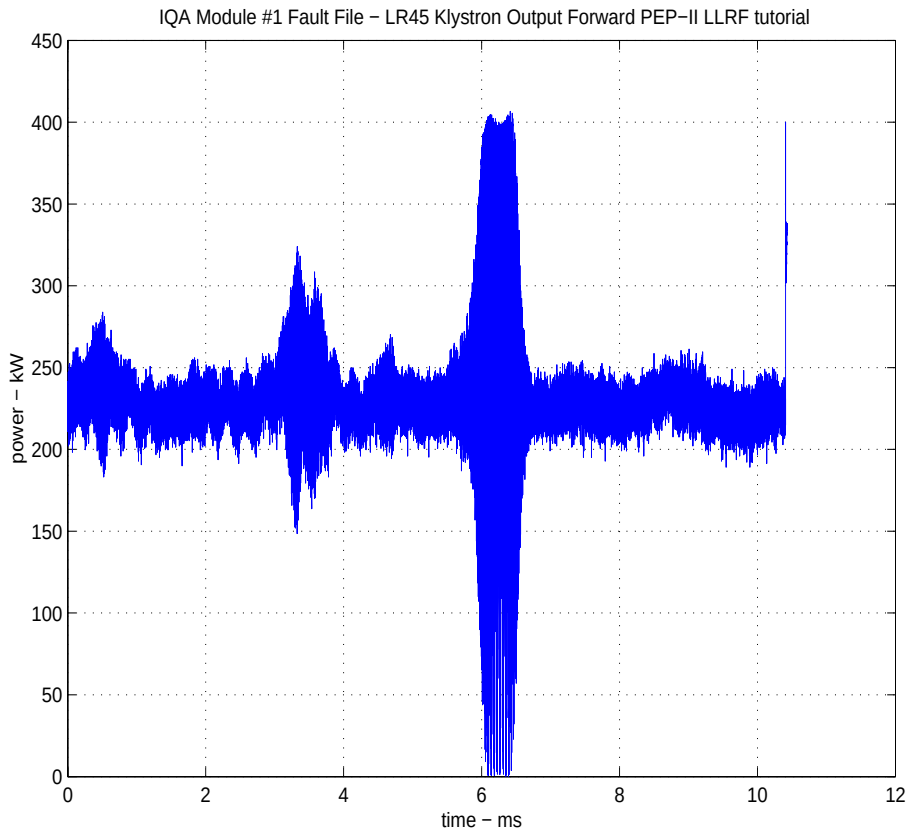

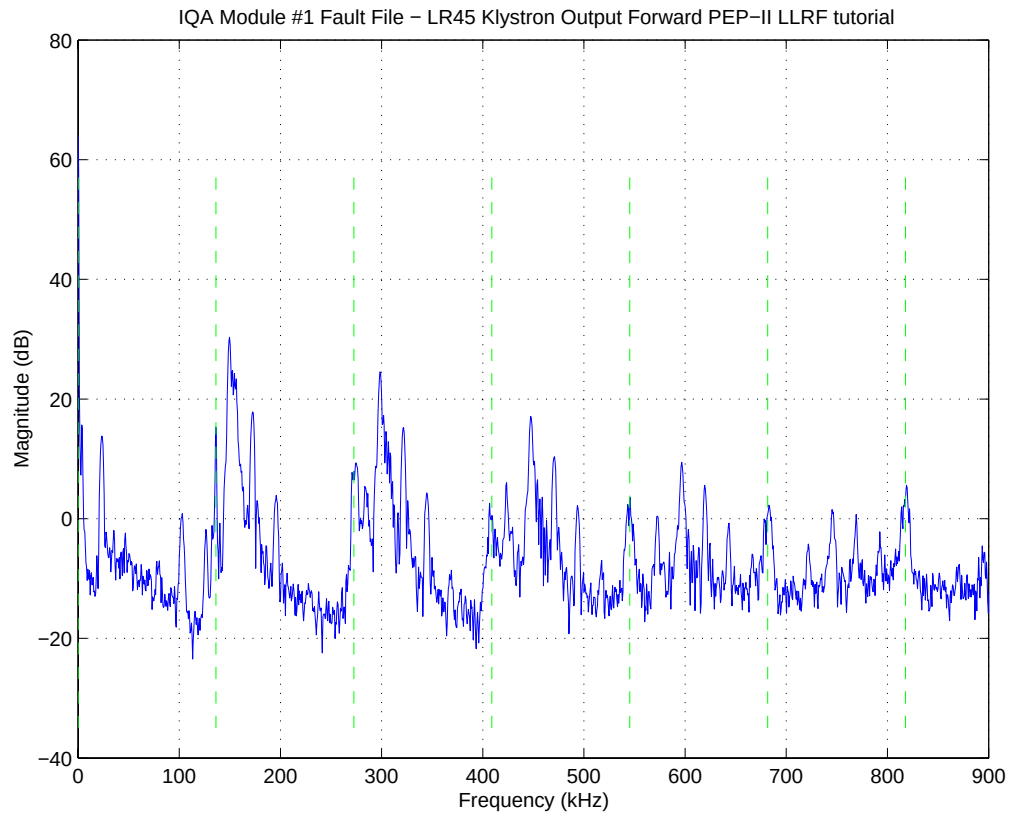

Commissioning Experience LFB

ALS - extensive experience with the "quick prototype" made commissioning fast

developed control filters, timing/ synchronization methods

First turn VXI systems to ALS (1994) - success at full 300 mA design current

PEP-II (1998)

Saturation on RF power supply noise (very different from ALS)

HOM Thresholds - consistent with cavity HOM measurements

Thresholds - low modes 300 mA

operational issues -

coordination with operations on synchronous phase, timing

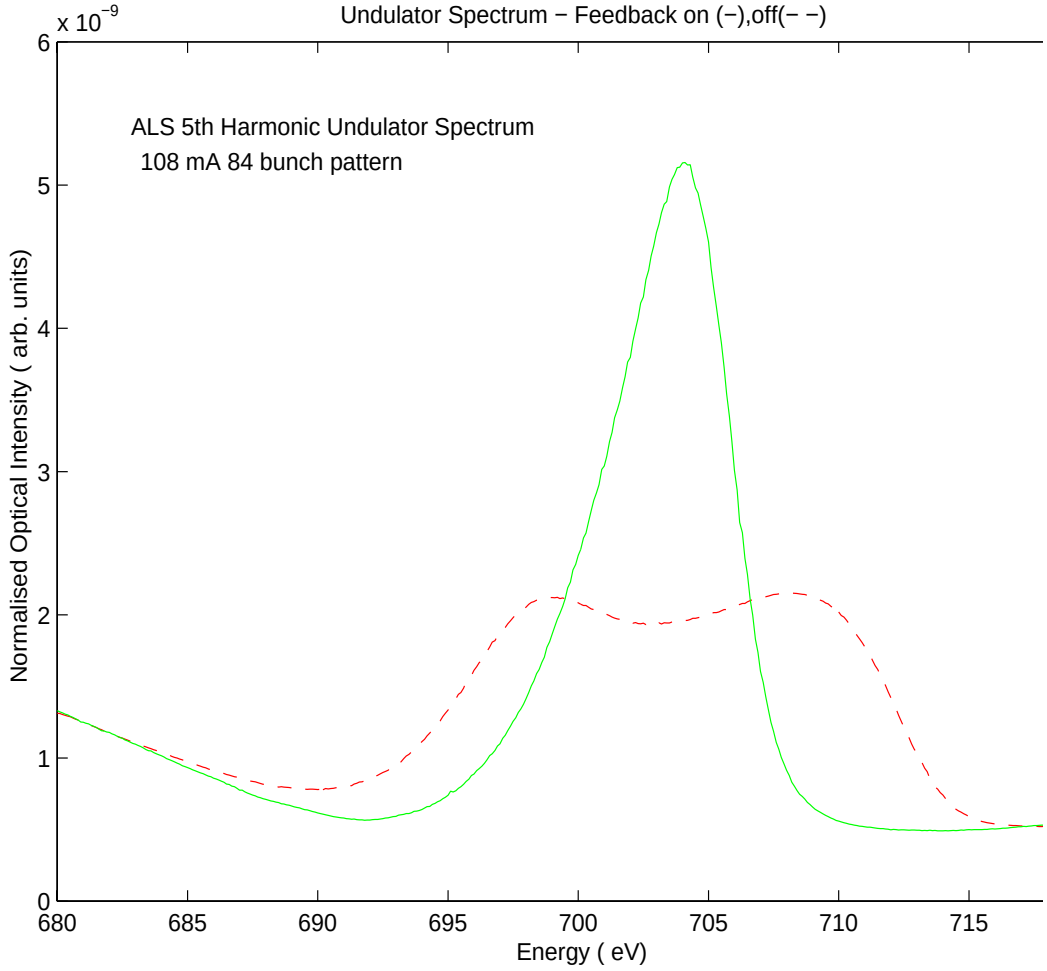

Major Developments/upgrades - LLRF

Model based configuration - reconfigure loops at current. (Dynamics changes with current)

Fault file methodology, weekly reports and analysis- understand origins of operational problems

Low Group delay Woofer - necessary above 1500 mA (HER), 2A (LER). Rapid low-mode growth

Klystron linearizer, improved Driver Amplifier- addresses limits of impedance control, allows comb rotation, more optimal station configurations

Extensive re-investment in LLRF-Beam simulation models, verification

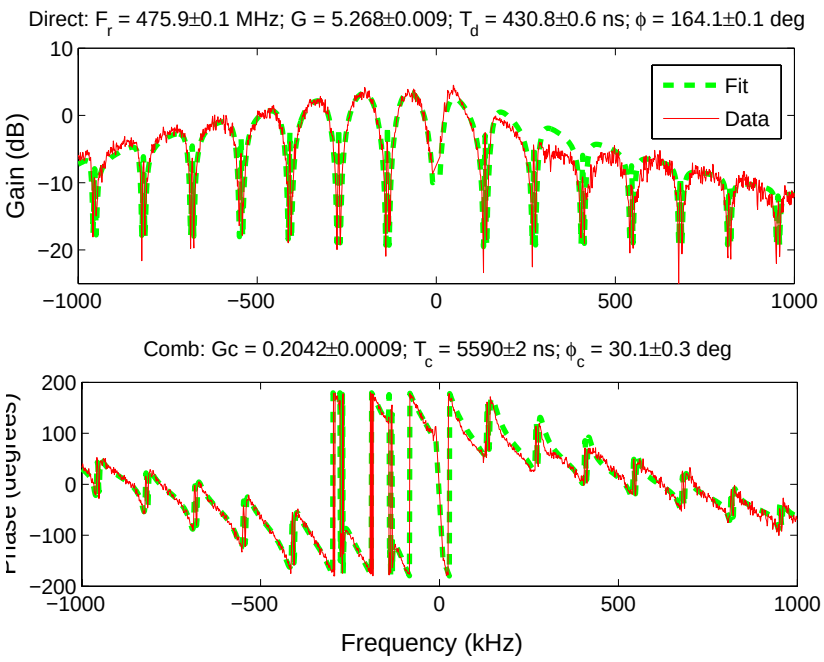

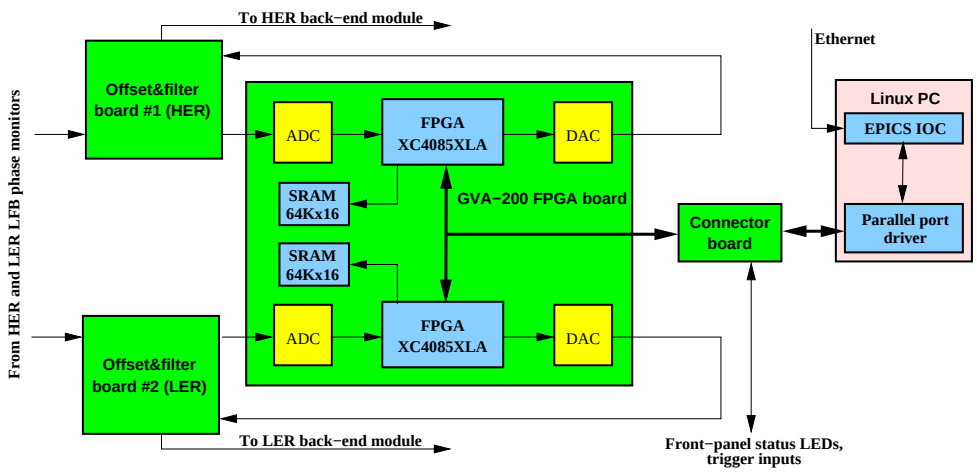

Major Developments/upgrades - LFB

Since commissioning - little hardware changes. Power amplifier issues - start 6 500W, now 8 (plus spare) 500W. Reliability problems DC supplies

Operational issue (compared to ALS)- timing of back-end, tracking synchronous phase changes. 9 (or 4) RF stations

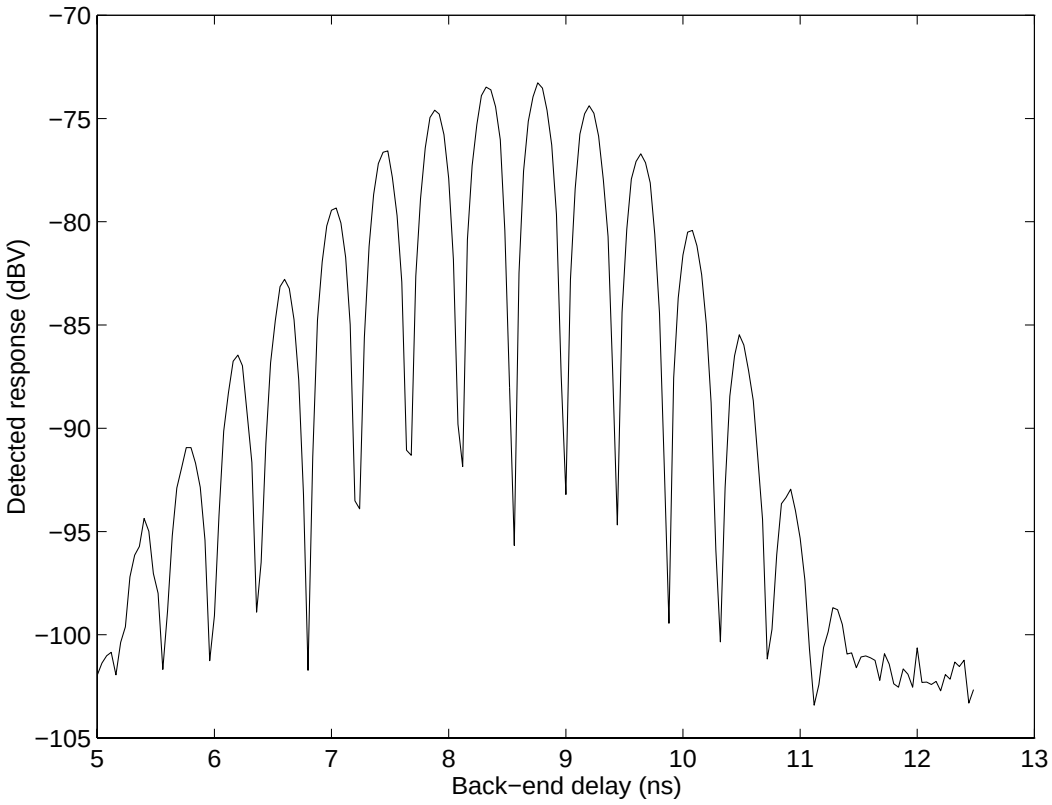

Front-end Issues

Not very difficult, 1.5 ns time structure. Errors of +/- 100 ps not significant. DC motion of synchronous phase tracked by low-frequency phase servo with 30 degree (at RF) range.

Back-end issues

Kicker drive waveform is in the 1 - 1.5 GHz band. For optimum gain, timing must be correct on the +/-100 ps level. Example - 1125 MHz kickers, errors of +/- 1/8 of the drive period (45 degrees, or 111 ps) drop the kicker gain by 3 dB. Errors of 1/4 the drive period (+/- 222 ps) drop the gain to zero. Requires care in setting up, and care to preserve in operation.

LFB Flexibility -Quadrupole instability control

DAFNE e+/e-collider at LNF

- increased operating currents
- quadrupole mode longitudinal instabilities have appeared (the installed system suppresses the dipole modes).

We implemented a novel quadrupole control filter

- software programmability of the DSP farm
- two parallel control paths for dipole and quadrupole modes.
- quadrupole control has been successful, allowing a 20% increase in luminosity.

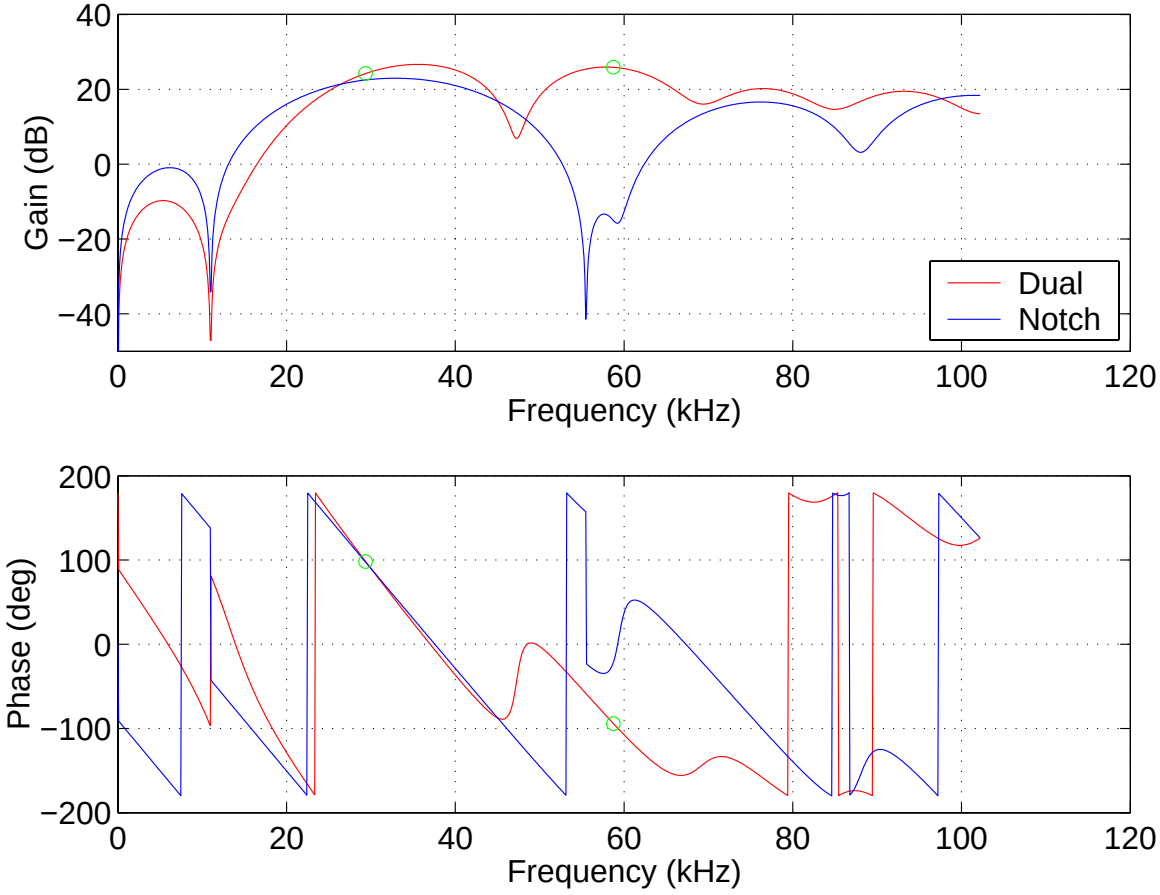

ALS added passive harmonic cavities (to address Tousheck-limited lifetime) - unanticipated effect giant tune change with current. Stability required a novel negative group delay IIR Filter

What wasn't foreseen

LFB - thermal problems with beam induced power in kickers

- kW power levels -SC/DIN/EIA connectors?
- Cable fires (several systems)

RF -

operational task - management of so many stations

- Individual station dynamics- unique station to station
- Individually configured stations

Impact of non-linear Klystron/Preamp

complexity of fault file analysis

R&D project - continual changes and performance push in the machine

How is this consistent with the operating machine?

Where we started, Where we are today

Year/run	LER stations	LER cavities	HER stations	HER cavities	I HER	I LER	L
1998	2	4	4(+1 parked)	16(+4 parked)	0.6A	1.0A	1.2E33
Run 1	2	4	5	20	0.9	1.5	3.0E33
Run 2	3	6	5	20	1.0	1.7	4.4E33
Run 3	3	6	6	22	1.1	1.9	6.3E33
Run 4	3	6	8	26	1.5	2.5	9.0E33
Run 5a	4	8	9	26	1.7	3.0	1.0E34
Run 5b	4	8	9	26	1.9	2.9	1.2E34
Run 6	4	8	11	28	1.9A	3.0A	1.2E34

HER reconfigured 4 cavity -> two cavity station in Run 3, susequently added 2 cavity stations

The operating configuration, gap voltages, tunes, etc. were constantly changing

HER current - 2x design LER Current -1.8x design Luminosity 4X design

LOM Growth rates HER 1.2 ms-1 LER 3.0 ms-1 (design - simulation was damped!)

HOM growth rates HER 3x design LER growth rates 0.45 ms-1 (5.6x design)

The PEP-II collider holds the world record for stored charge in a storage ring (roughly 3 A at 3 GeV).

Are we successfully running in the feedback and LLRF areas because it was easy and we overdesigned/overestimated things?

Predictions for 2008

Last year of operations

Plan to push from 1.2E34 to 2E34

Many Accelerator issues (e.g. bunch length, heating, optics, etc.)

Extensive modelling of LLRF, Beam dynamics suggests operation at

HER - 2.2A

LER - 3.8 A

is possible, with

- New Driver amplifiers
- Comb Rotation technique
- Careful operating point selection

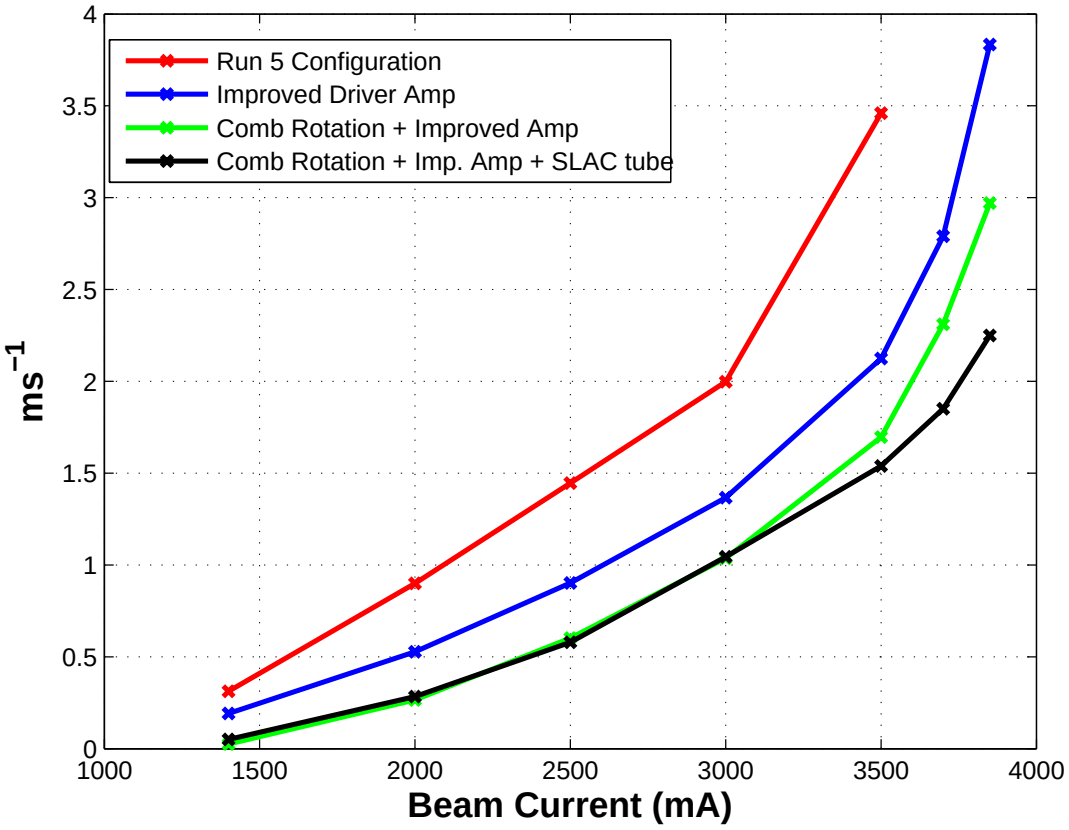

Where are we now - LOM and HOM control

Last year of Operations

Plan to push from 1.2E34 to 2E34 - via current increase, bunch length, optics changes

Longitudinal stability- Data from LER 2900 mA

Growth/Damping rate isn't the issue. Strange interfering signals at 1100 Hz, etc. are a mystery

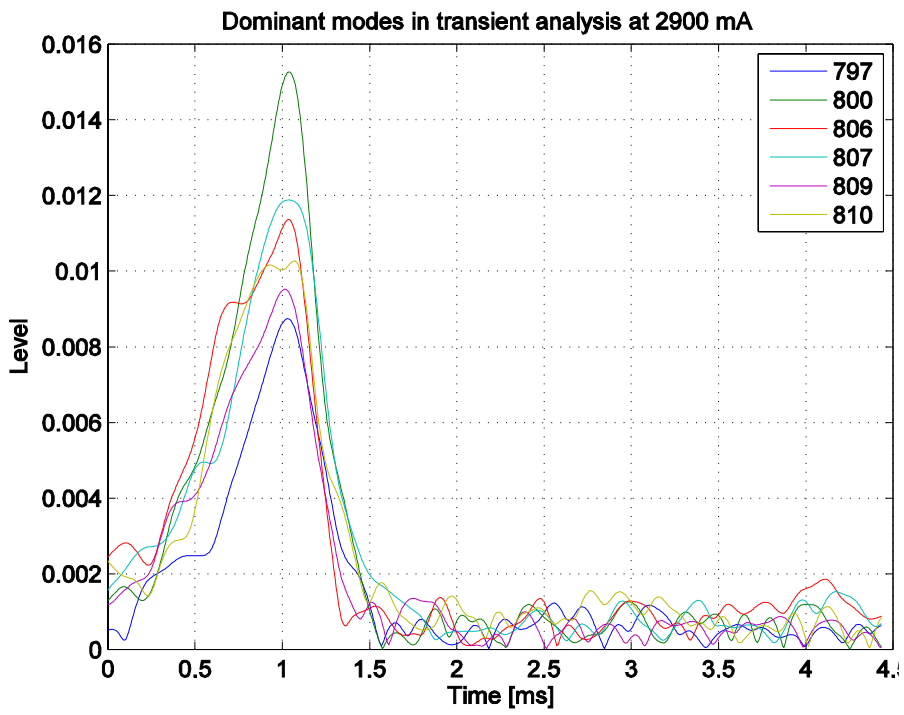

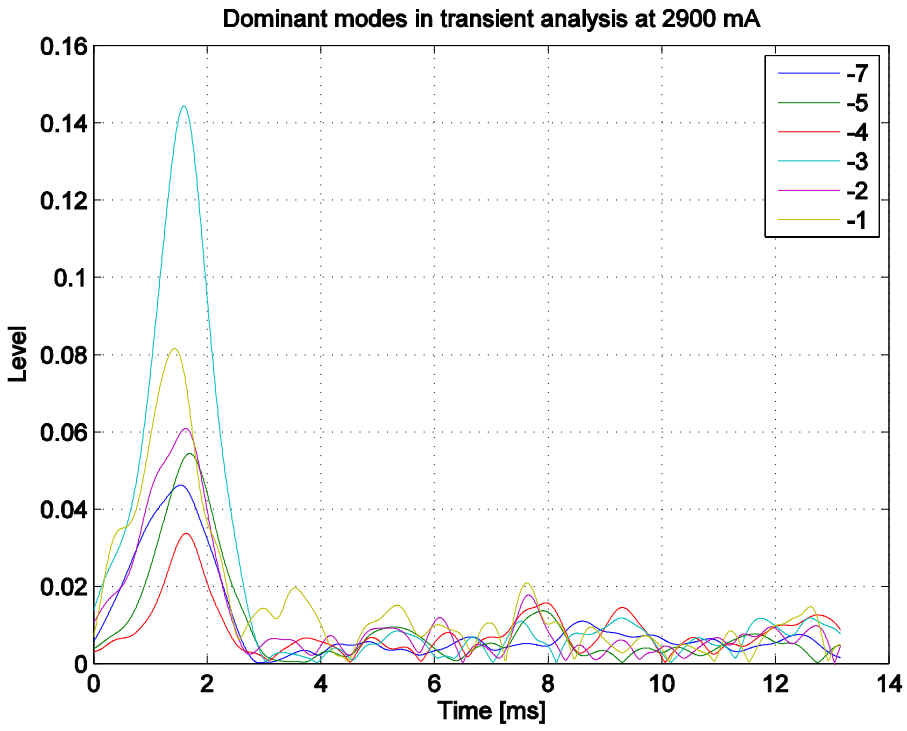

Lessons Learned

LLRF Modelling - key to understanding non-linear effects

- Non-linear klystron was less significant than drive amplifier

Without models - impossible to sort out effects, see if things were worse than they should be

Models - prediction of limits, new control techniques(comb rotation)

This took years, but was invaluable

Fault Files - so much information

PEP-II Experience - needs a full-time RF expert just to understand complexities of faults

who is the customer for this information?

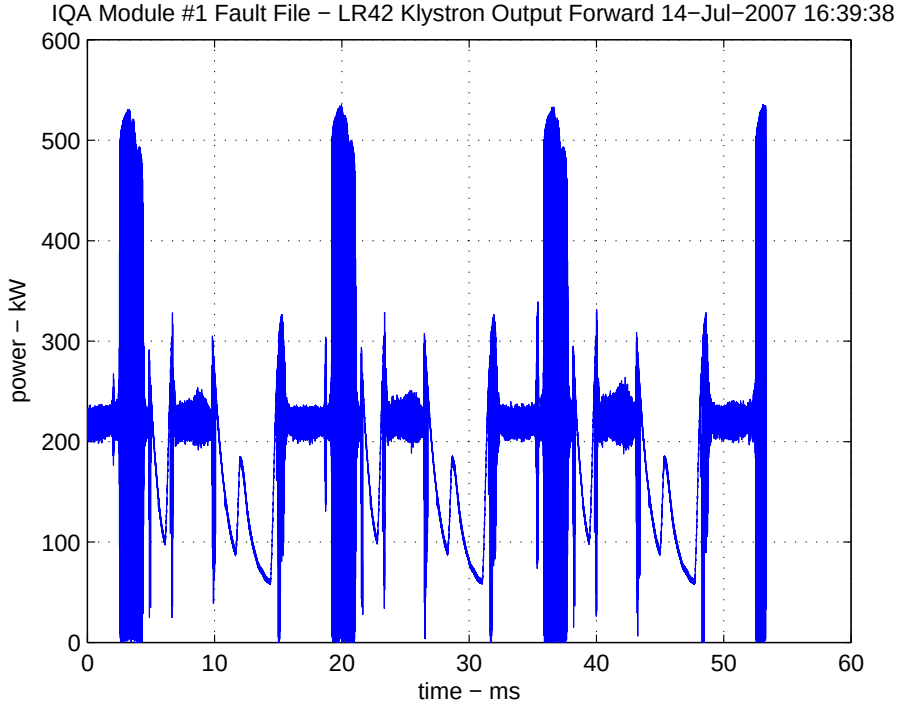

LFB - transient domain measurements key to understanding dynamics

Flexibility of DSP architecture key to unexpected applications

New Accelerator Diagnostics developed

Summary - Lessons learned

Are we successfully running in the feedback and LLRF areas because it was easy and we overdesigned/overestimated things?

LLRF and RF dynamics

- Complexity of RF system, stability of low modes, operational issues - completely underestimated
- Operational intensity, issues of constantly moving configurations (klystrons on/off, gap voltages)
- Manpower/skill of operational support woefully underestimated/under supported

Broadband (coupled-bunch) longitudinal feedback

- Essential techniques developed at ALS and other facilities - tremendous benefit to PEP-II
- Very lucky (wise?) design choices for detection frequency, scalability of output power

What features were essential for success

- Flexibility (reprogrammability, modular architecture), close ties to modelling/measurements
- Most important element- Creative, highly curious group with concurrent physics/technology skills
- Diverse set of interesting challenges

Acknowledgments

Thanks to D. Andersen, L. Beckman, P. Corredoura, T. Mastorides, M. Minty, C. Limborg, S. Prabhakar, W. Ross, J. Sebek, D. Teytelman, R. Tighe, U. Wienands, A. Young, JiaJing Xu (SLAC), H. Hindi, I. Linscott (Stanford), M. Tobiyama, E. Kikutani (KEK), A. Drago, F. Marcellini, M. Serio (LNF-INFN), Shaukat Khan (BESSY), H. Kang (POSTECH),W. Barry, J. Byrd, J. Corlett, G. Lambertson, G. Stover and M. Zisman (LBL) for numerous discussions, advice and contributions.

The PEP-II LLRF Systems were inspired by Flemming Pedersen (CERN) and developed by P. Corredoura, R. Tighe, L. Sapozhnikov,B. Ross, J. Judkins, H. Schwarz, A. Hill (SLAC) and many others. System software was designed and coded by S. Allison, R. Claus, K. Krauter, S. Prabhakar and D. Teytelman (SLAC)

The PEP-II LFB digital processing architecture and modules were skillfully designed and developed by G. Oxoby, J. Olsen, J. Hoeflich and B. Ross (SLAC) - System software was designed and coded by R. Claus (SLAC), I. Linscott (Stanford), K. Krauter, and D. Teytelman (SLAC)

The wideband longitudinal kicker for ALS and PEP-II was designed and developed by F. Voelker and J. Corlett (LBL). The kicker for DAFNE was designed by R. Boni, A. Gallo, F. Marcellini, et.al.

Special thanks to Boni Cordova-Grimaldi (SLAC) for fabrication expertise and to the ALS, SPEAR, PEP-II, DAFNE, PLS and BESSY-II operations groups for their consistent good humor and help.

Work supported by U.S. Department of Energy contract DE-AC03-76SF0051

Longitudinal Feedback System Features

Multiprocessor architecture fully implements ALS/BESSY-II/DAΦNE/PEP-II/PLS/SPEAR requirements. Scalable, flexible architecture for up to 8192 bunches with up to 500 MHz sampling rates.

- DSP processor -VME card,4 AT&T DSP 1610s
- VME interface - Bus master for data distribution
- Downsampler- 500 MHz A/D and VXI Sequencer
- Hold Buffer -500 MHz D/A and VXI Ring Buffer
- Timing - VXI oscillators (RF, $6 \times RF$, $9/4 \times RF$)
- Front-end - Comb filter followed by $6 \times RF$ (3 GHz) phase detector - 600 MHz IF bandwidth
- Back-end - AM modulator transfers baseband kick to QPSK'ed carrier (1125 MHz, 1071 MHz, 1196 MHz, 1375 MHz).
- Software - VxWorks operating system for configuration and control with EPICS-based user interface
- Data analysis in Matlab, Automated diagnostics and setup tools
- Link error checking, temperature monitoring

Kicker Timing and Ring Timing Issues

Bunch-by-bunch systems - require timing to synchronize to ring

- RF clock (AC coupled, RF signal)
- Fiducial (ECL or NIM logic) - fast to identify single bucket

Front-end Issues

baseband detected comb output synchronized to sampling clock. Not very difficult, as baseband signal has 1.5 ns time structure. Errors of +/- 100 ps not significant. DC motion of synchronous phase tracked by low-frequency phase servo with 30 degree (at RF) range.

Back-end issues

Kicker drive waveform is in the 1 - 1.5 GHz band. To get optimum gain, timing must be correct on the +/-100 ps level. For example - 1125 MHz kickers, errors of +/- 1/8 of the drive period (45 degrees, or 111 ps) drop the kicker gain by 3 dB. Errors of 1/4 the drive period (+/- 222 ps) drop the gain to zero. Requires care in setting up, and care to preserve in operation.

Back-end timing

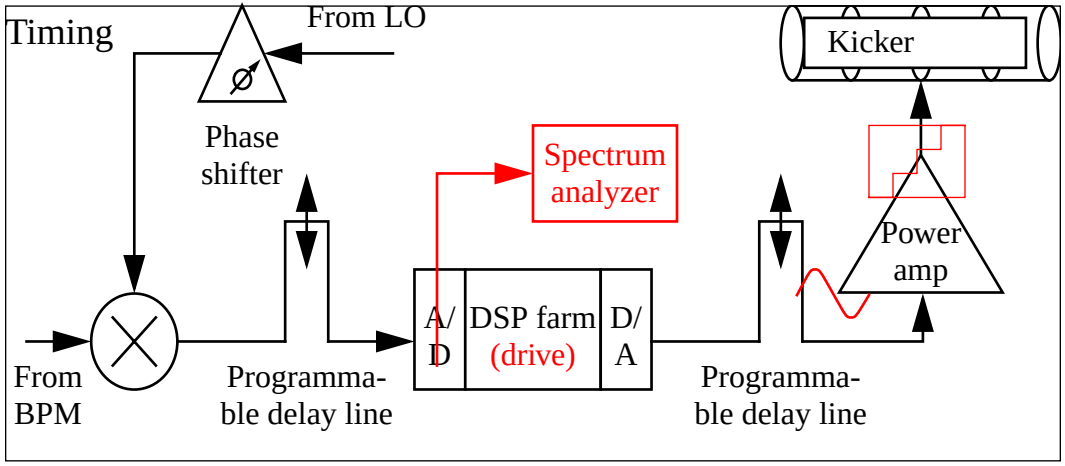

Drift-Tube Kicker Impulse Response

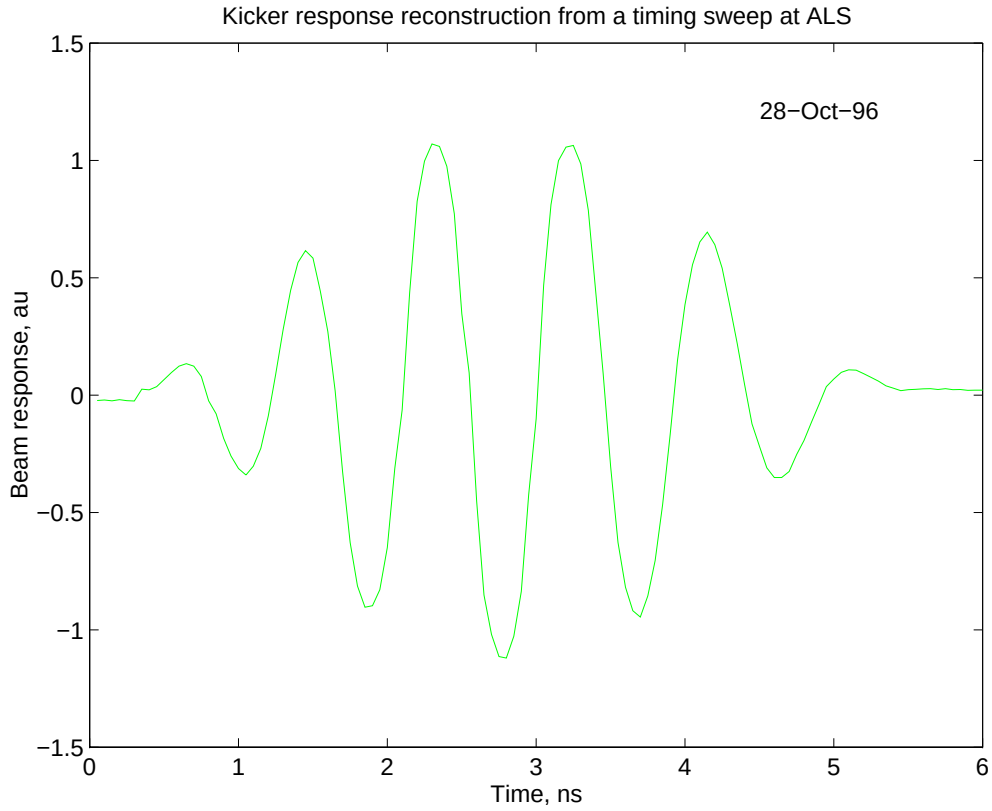

Beam Counter-Propagates with travelling RF signal

Grow/damp measurement example from PLS

A 30 ms long data set with 15 ms open-loop section.

All filled bunches participate in the modal motion. Transformation to the even-fill eigenmode basis simplifies the picture - there are three strong eigenmodes in this transient. Fitting complex exponentials to the modal motion we extract estimates of the modal eigenvalues for both open and closed-loop parts of the transient.

A single measurement like this only characterizes the instabilities and the feedback at a single accelerator operating point.

A very powerful technique is to measure modal eigenvalues as a function of beam current, RF system configuration, etc.

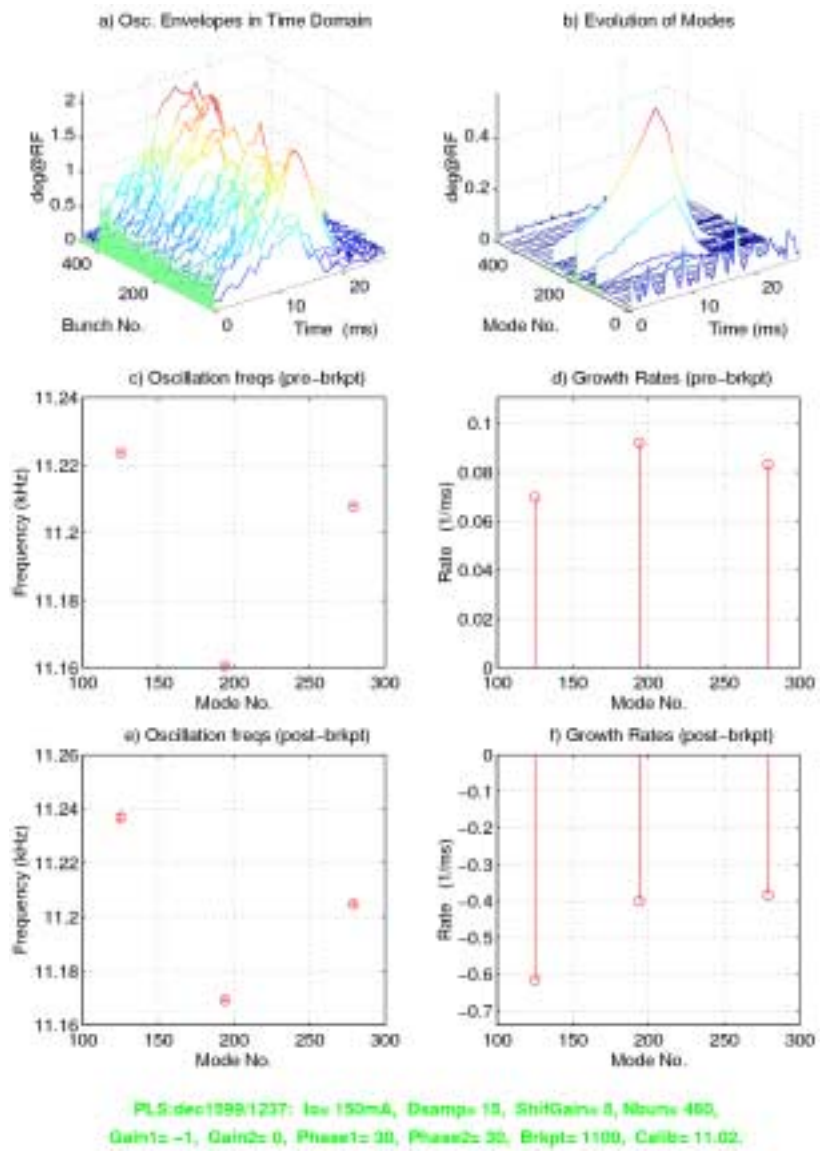

Ultimate/Practical Limits to Instability Control

What Limits the Maximum Gain (e.g. fastest growth rate, or allowed impedance)?

Several Mechanism

I). Noise in feedback filter bandwidth, limits on noise saturation. Gain is from several stages -

Front End (BPM to baseband signal) gain limited by required oscillation dynamic range, steady-state offsets (synchronous phase transients, orbit offsets)

Processing Block - gain limited by noise in filter bandwidth. Quantizing noise (broadband) is one system limit - noise from RF system or front-end circuitry may also contribute. Narrowband filters help with broadband noise. Broad filter bandwidths help with reduced sensitivity to machine tunes, operating point - or variations of dynamics with current

Power stages - gain scales with kicker impedance, sqrt(output power). An expensive way to increase gain (more kickers, more output power).

Output power (actually maximum kicker voltage) determines maximum oscillation amplitude from which linear (non-saturated) control is possible. Saturated behavior is complicated

Ultimate/Practical Limits to Instability Control

II) Stability of the feedback loop itself, (e.g. limits on phase shift and gain vs. control frequency)

Related to time delay between pickup, processing, and actuator

For circular machines (systems with kick signal applied on later turn than pickup)

limit set by revolution time, fastest growth rates, and filter phase slope over control band

Appropriate for optimal control theory applications

- LQR
- Robust Control
- Uncertain Systems

Negative group delay over a portion of the frequency band is possible, but for causal systems you pay the price in increased phase slope away from the negative region