Multi-intermediate Frequency Mixture Technique

Toshihiro MATSUMOTO (KEK)

Contents

1. Concept of the IF-mixture technique
2. System overview
3. Performance of IF-mixture technique
4. Comparison with conventional single IF method
5. Summary

Concept of the IF-mixture technique

ILC configuration

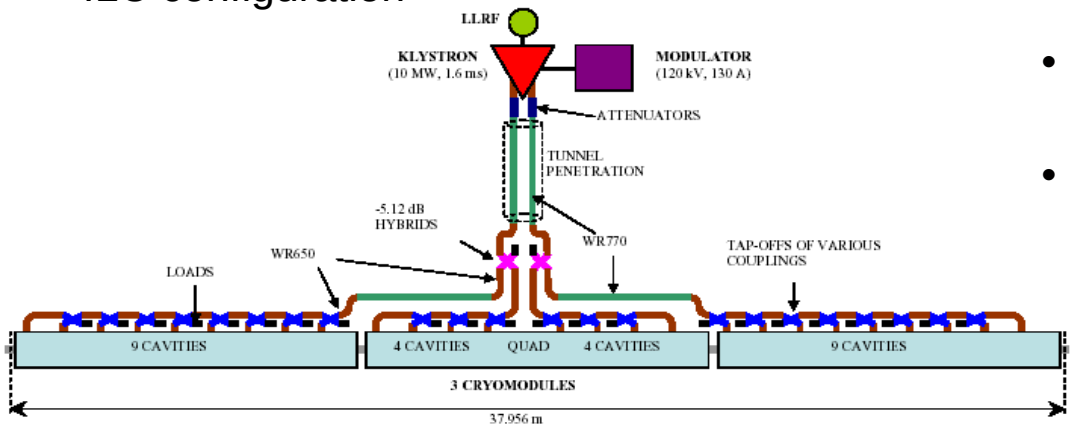

- One klystron drives 26 cavities (for ILC) / 32 cavities (for XFEL).
- For vector-sum FB control, the information (amplitude and phase, or I/Q) of all cavities must be measured.

To detect the signals of 26 or 32 cavities,

1) Two kinds of FPGA board

- 10 ADCs + FPGA
  (ex. SIMCON 3.1)
- 10 ADCs + FPGA
- concentrator board
  (ex. SIMCON 4.0)

2) Multi-channel ADC (serial output)

P. Varghese et al. WEPMN112(PAC07)

Four 8 channel 12 bit ADCs = 32 ADCs

To make a FPGA board that mounts 26 or 32 ADCs with parallel output and more than 12bit

-> too expensive? or impossible?

Concept of the IF-mixture technique (cont.)

- Conventional single IF method

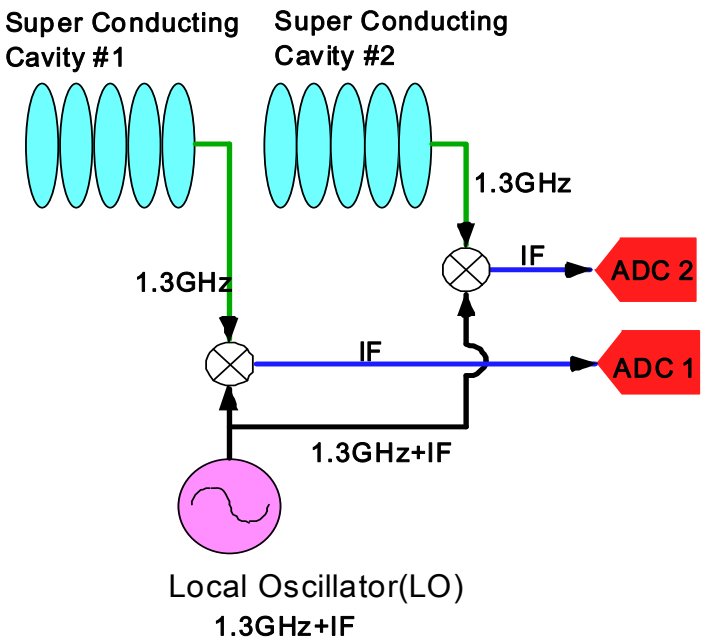

- One Local Oscillator (Common IF)
- No. of ADCs = No. of Cavities

- IF-mixture technique

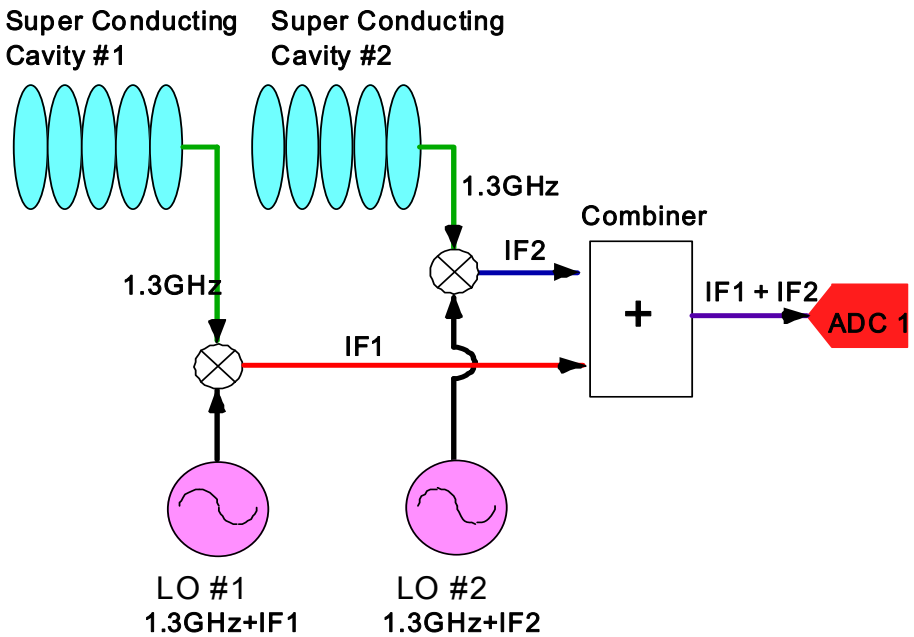

- Two Local Oscillators with Different Frequency
- Each IQ component of cavities are calculated by DSP inside FPGA
- No. of ADCs = ½(No. of Cavities)

- Possible problems
  - less bit-resolution/signal
  - more latency (less gain margin?)
  - worse FB stability

IQ-detection algorithm

$$I = \frac{2}{N}\sum_{n=1}^{N} x_i(n)\cdot\cos\left(\frac{2\pi}{N}\cdot n\right)$$

$$Q = \frac{2}{N}\sum_{n=1}^{N} x_i(n)\cdot\sin\left(\frac{2\pi}{N}\cdot n\right)$$

- M. Grecki et al., MIXDES'05
- S. Simrock et al., EPAC2006

・If the frequencies of the mixed IF signals have a relation

$$IF = \left(\frac{M}{N}\right)\cdot SR \quad (M = 1, 2, 3 \ldots)$$

this algorithm is effective for calculating IQ component of a IF signal from the mixed IF signal.

(SR: sampling frequency of the ADC)

In this example, N = 12,
・IF1(n/6 MHz) = (2・n/12 MHz),
・IF2(n/4 MHz) = (3・n/12 MHz).

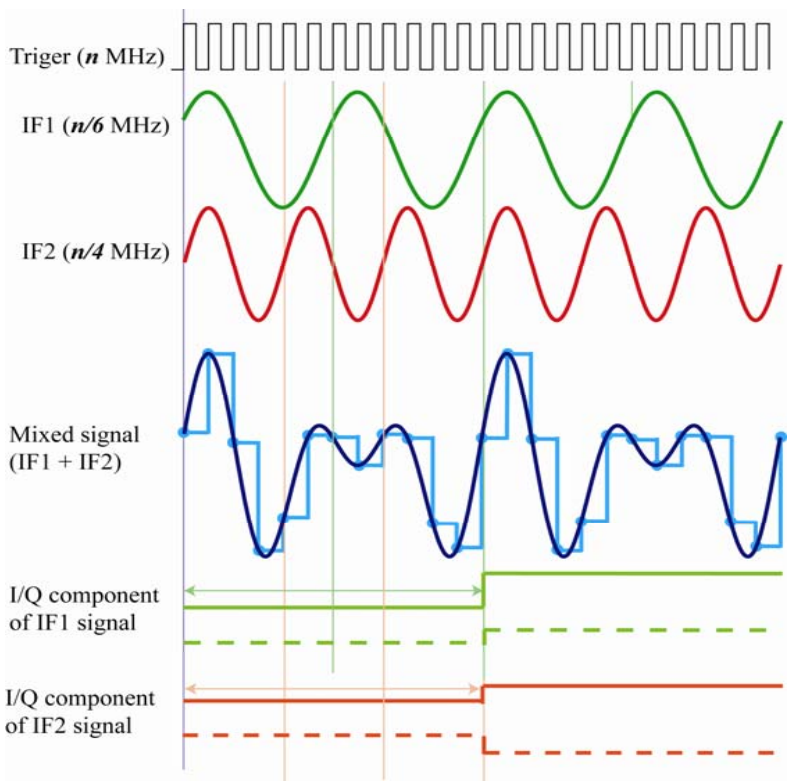

Combined IF signal after sampling at ADC

$$x_1(n) + x_2(n) = I_1\cdot\cos\left(\frac{2\pi}{N_1}\cdot n\right) + iQ_1\cdot\sin\left(\frac{2\pi}{N_1}\cdot n\right) + I_2\cdot\cos\left(\frac{2\pi}{N_2}\cdot n\right) + iQ_2\cdot\sin\left(\frac{2\pi}{N_2}\cdot n\right)$$

IQ component of IF1

$$I_1 = \frac{2}{N}\sum_{n=1}^{N}(x_1(n)+x_2(n))\cdot\cos\left(\frac{2\pi}{N_1}\cdot n\right) = \frac{2}{N}\sum_{n=1}^{N} x_1(n)\cdot\cos\left(\frac{2\pi}{N_1}\cdot n\right)$$

$$Q_1 = \frac{2}{N}\sum_{n=1}^{N}(x_1(n)+x_2(n))\cdot\sin\left(\frac{2\pi}{N_1}\cdot n\right) = \frac{2}{N}\sum_{n=1}^{N} x_1(n)\cdot\sin\left(\frac{2\pi}{N_1}\cdot n\right)$$

IQ component of IF2

$$I_2 = \frac{2}{N}\sum_{n=1}^{N} x_2(n)\cdot\cos\left(\frac{2\pi}{N_2}\cdot n\right)$$

$$Q_2 = \frac{2}{N}\sum_{n=1}^{N} x_2(n)\cdot\sin\left(\frac{2\pi}{N_2}\cdot n\right)$$

System Overview

Configuration:

a FPGA board, two cavity simulator

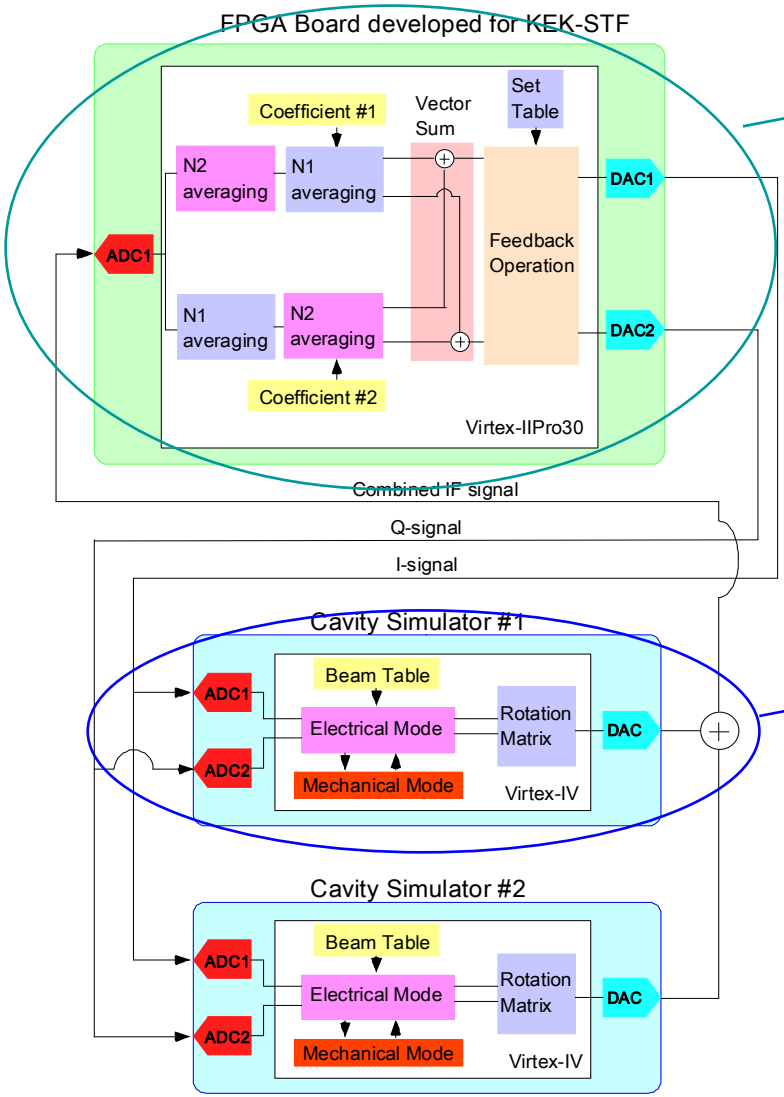

•FPGA Board (developed for KEK-STF)

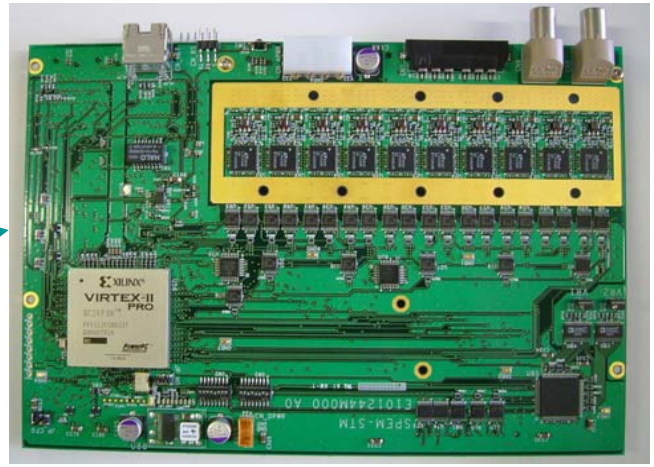

FPGA：VirtexⅡPro30(Xilinx)

16-bit ADC(LT2208)：10ch

14-bit DAC(AD9764)： 2ch

•Cavity Simulator

Nallatech – XtremeDSP Development Kit-Ⅳ

FPGA(Xilinx Virtex-Ⅳ)

14bit ADC(AD6645):2ch

14bit DAC(AD9772A):2ch

Input : I/Q signal

Output : Cavity signal modulated with IF frequency

Performance of IF-mixture technique (2 IF signals)

- ADC Sampling Frequency, FPGA Clock: 40.625MHz
- IF3: 13.542MHz (=40.625MHz/3)
- IF6: 6.771MHz (=40.625MHz/6)

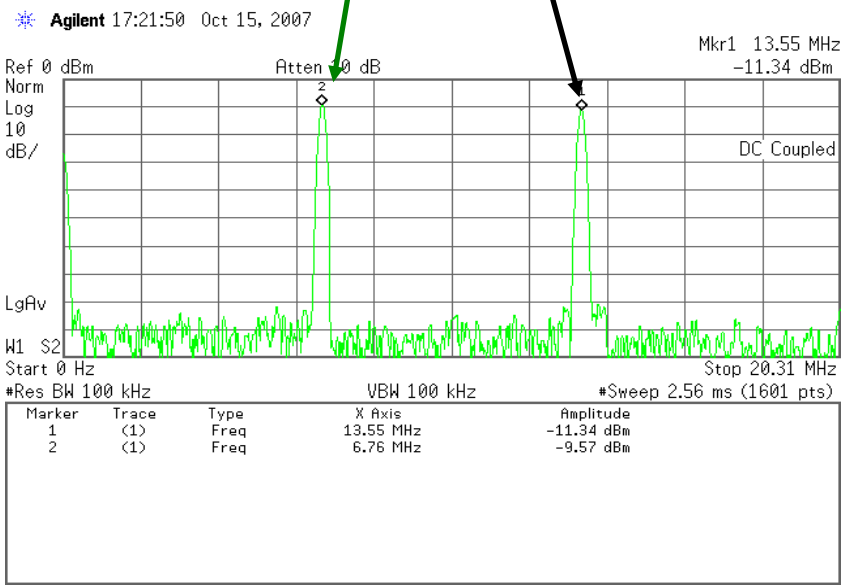

- Frequency Spectrum of combined IF signals (Input signal to ADC)

- FB operation (P control only)
  set point of flattop: 14000, P gain: 211

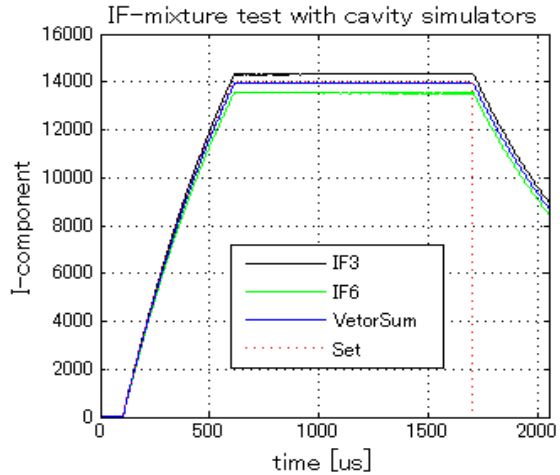

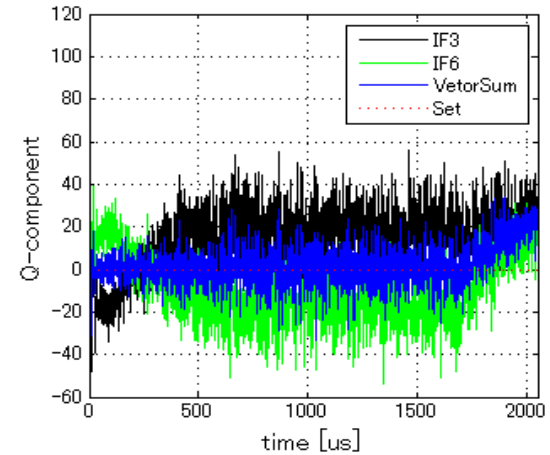

Amplitude (Vector sum)

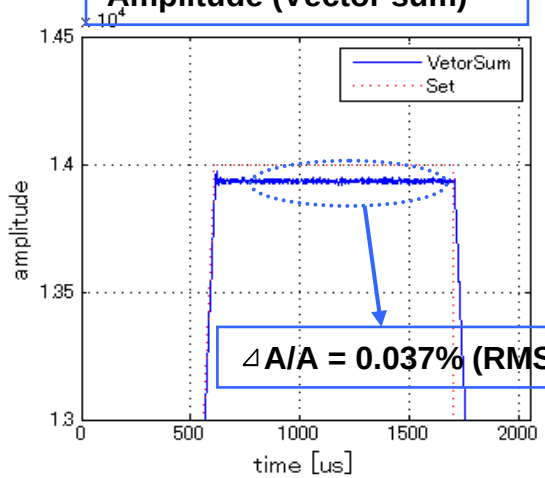

⊿A/A = 0.037% (RMS)

Phase (Vector sum)

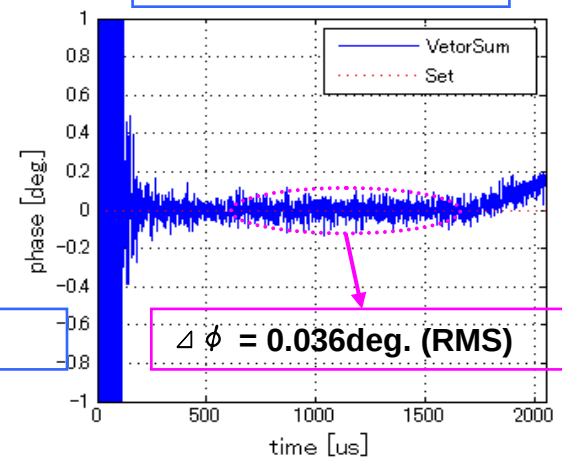

⊿ϕ = 0.036deg. (RMS)

Performance of IF-mixture technique (4 IF signals)

- ADC Sampling Frequency, FPGA Clock: 40.625MHz
- IF3: 13.542MHz (= 40.625MHz/3)
- IF4: 10.156MHz (= 40.625MHz/4)
- IF6: 6.771MHz (= 40.625MHz/6)
- IF8: 5.078MHz (= 40.625MHz/8)

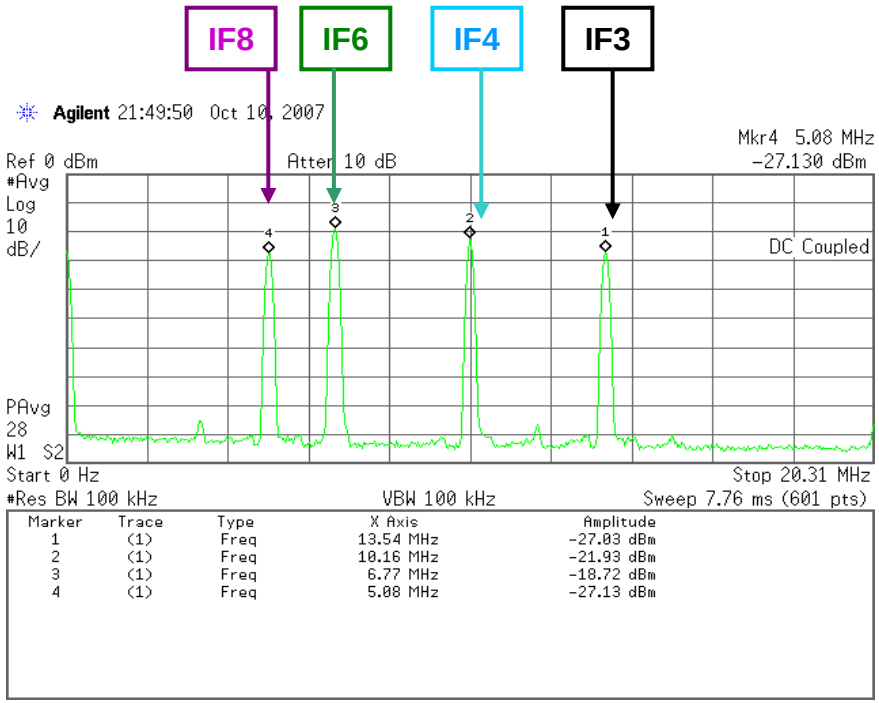

- Frequency Spectrum of combined IF signals (Input signal to ADC)

- FB operation (P control only)
  set point of flattop: 7000, P gain: 98

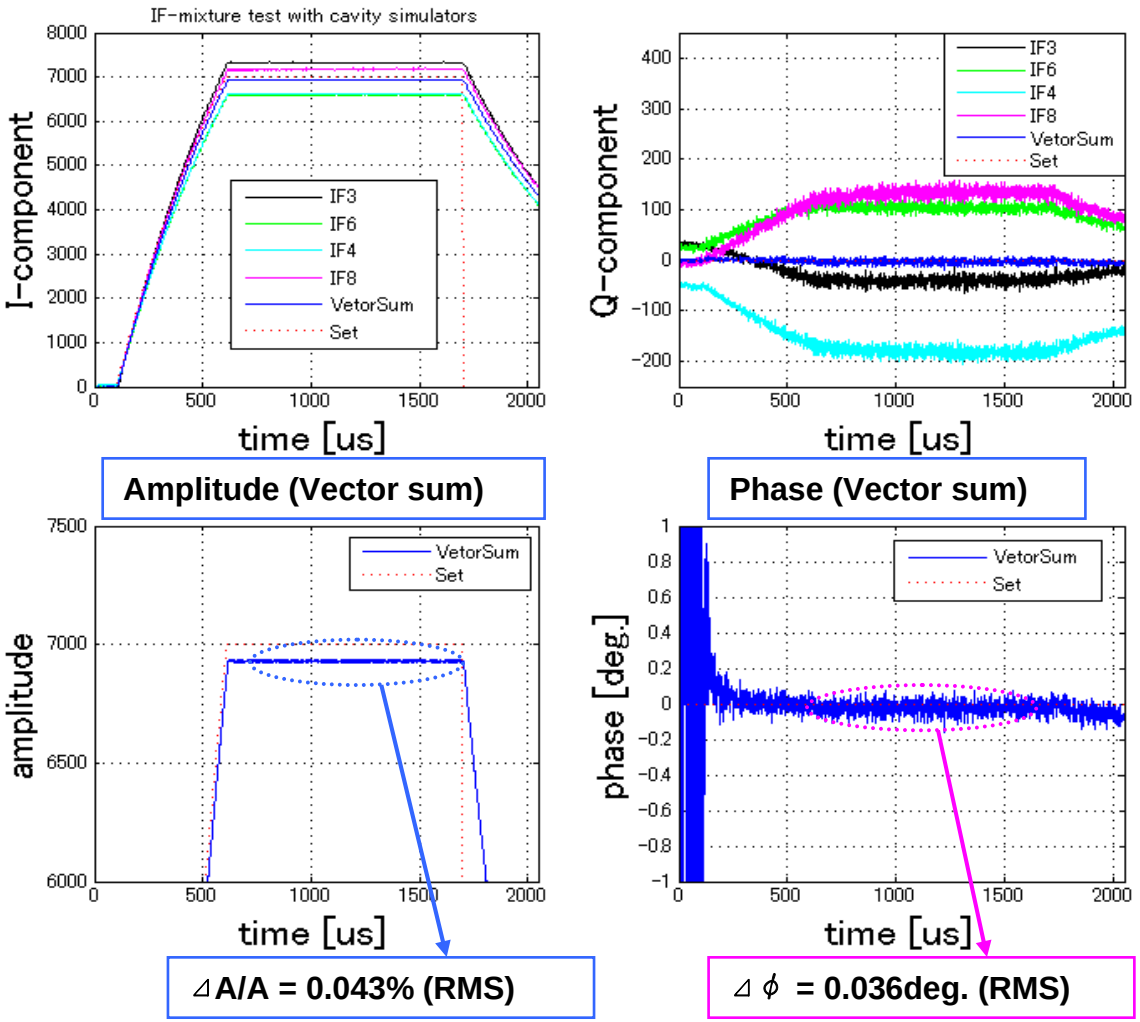

Comparison with conventional single IF method

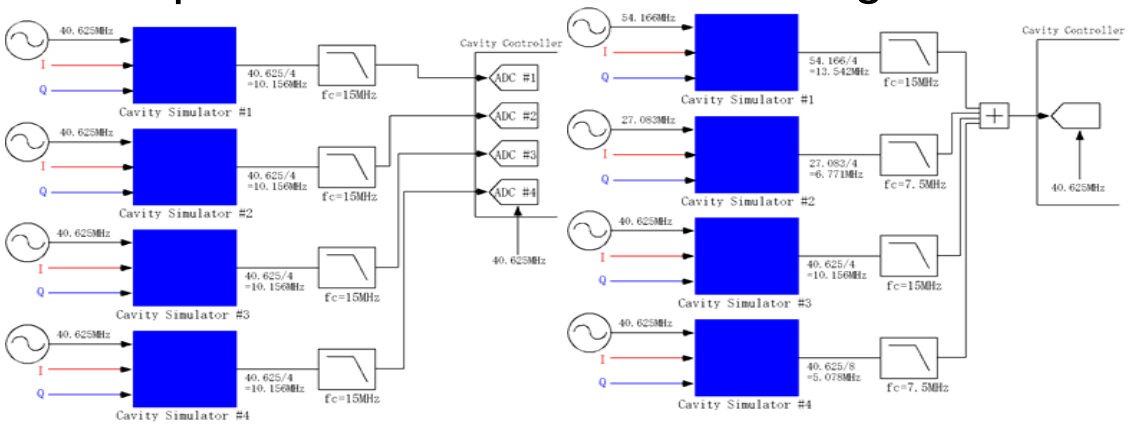

●conventional single IF

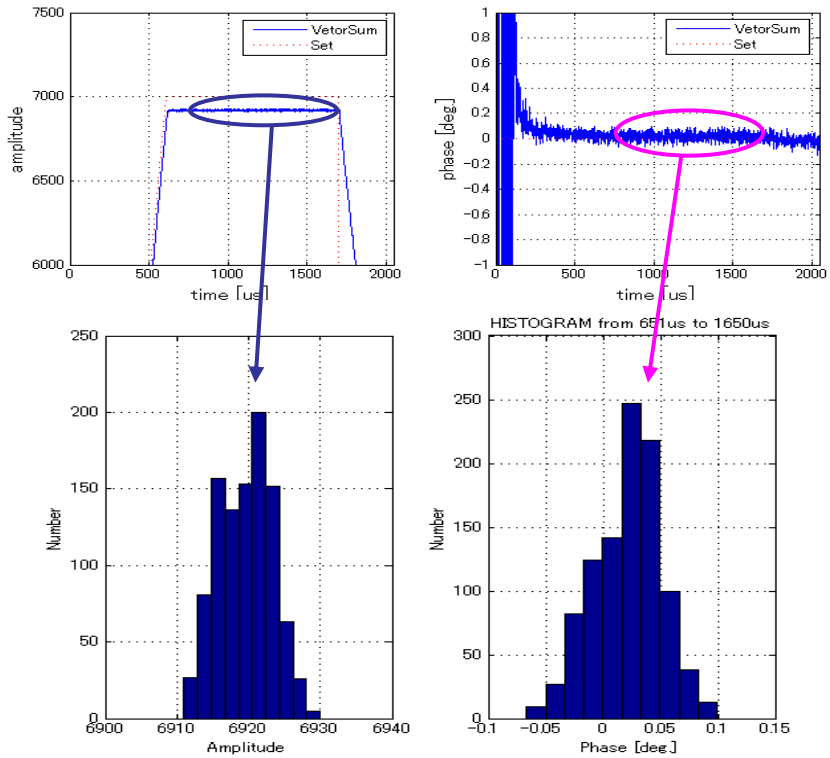

●4 IF-Mixture

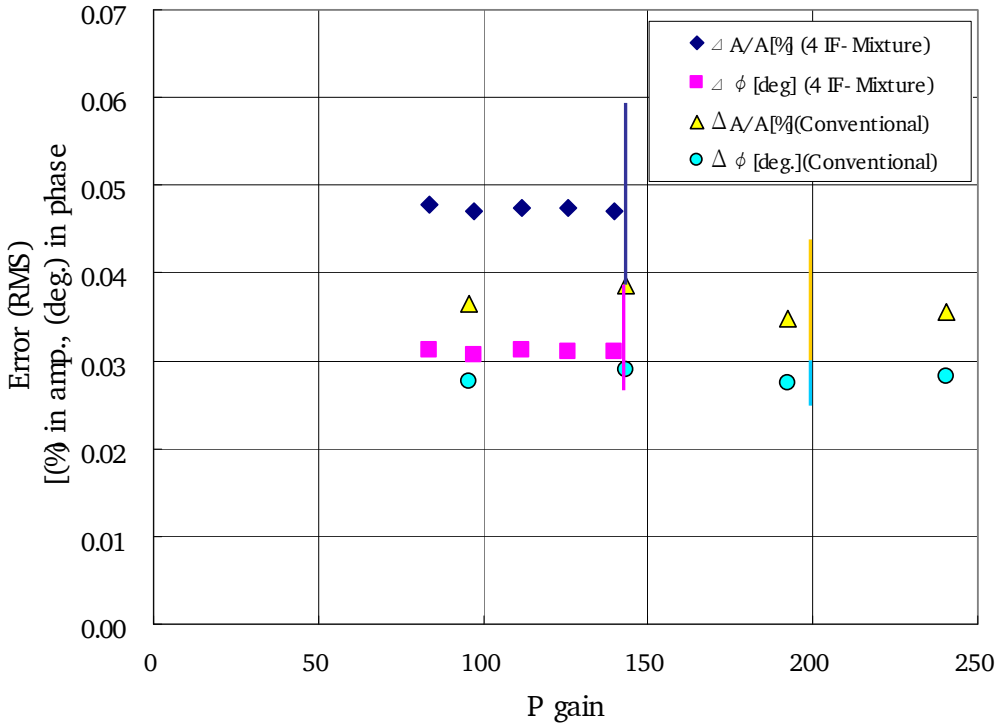

Errors (RMS)

Conventional: 0.036%(amplitude), 0.029deg.(phase)

4 IF Mixture : 0.047%(amplitude), 0.031deg.(phase)

Summary

- A digital FB system with the IF-mixture technique on two and four IF signals has been developed. The system is examined by employing four cavity simulators.
- The error of stabilities for amplitude and phase are

  Conventional: 0.036%(amplitude), 0.029deg.(phase)
  4 IF Mixture : 0.047%(amplitude), 0.031deg.(phase).

- In order to demonstrate this IF-mixture technique using a superconducting cavity (ex. KEK-STF), it is planned to modify the signal distribution system for generating the LO signals with different frequencies.