Finite State Machine for TTF RF System

By Valeri Ayvazyan & Stefan Simrock

(Description of Procedures)

Contents

1 Introduction
Document Organization
2 Finite State Diagram
Short Descripton of State Diagram
3 Description of Procedures

1 Introduction

Finite State Machine for TTF RF System has been implememted as a DOOCS server. Several client programs may read or write to the state machine. The actual states of the server can be displayed on any client on the network via the DOOCS protocol. All properties of state machine server is accessible from the network like other DOOCS server.

State:

1. Name
2. Description (optional)
3. Status (Active | Passive)
4. Type (State | Superstate | Rootstate)
5. INIT () procedure (optional)
6. ENTER () procedure (optional)
7. DURING () procedure (optional)
8. EXIT () procedure (optional)
9. List of Transitions
10. List of Event Handlers (ON_EVENT (), optional)
11. List of Data (optional)
12. List of Substates (Flows, optional)

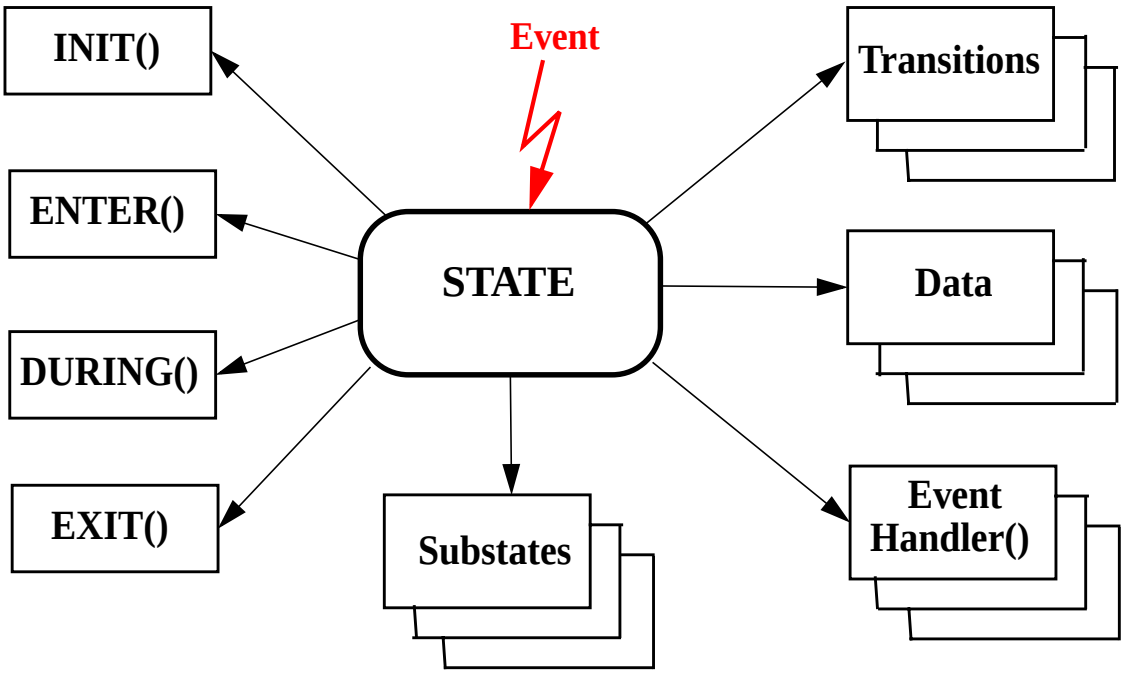

Figure x.

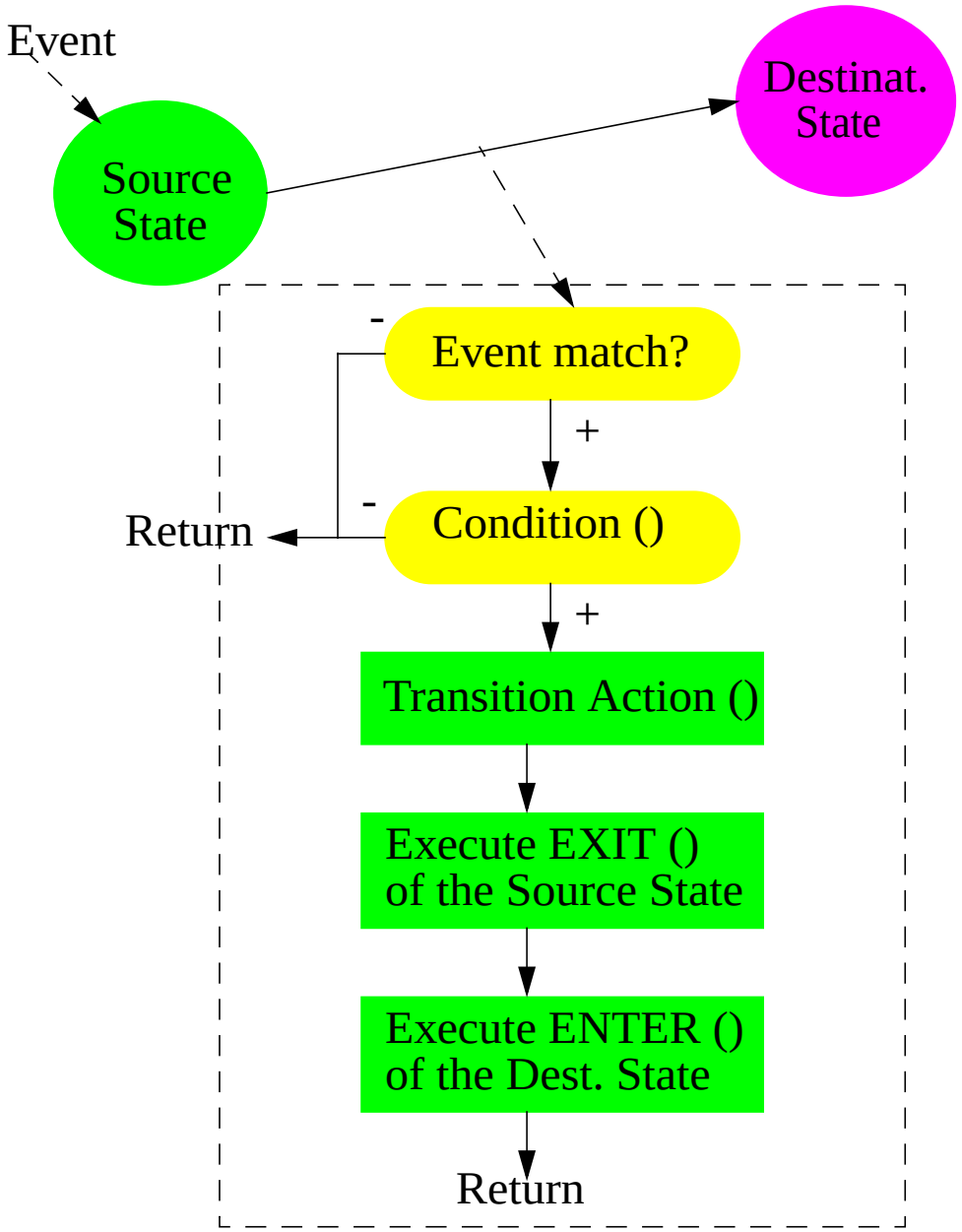

Transition:

1. Source State
2. Destination State
3. Event (optional)
4. Condition (including TRUE, optional)
5. Transition Action (optional)

RF Turn-On for one RF station System

1.0 Open loop

Everything is off. DAC output is zero. Klystron is in off state.

- Turn on klystron. Wait for "Ready for HV". Turn HV to a save level (e.g. 60%). Klystron is on. DAC output is zero.
- Open rf switch (to guarantee that power is off)
- Set open loop operation
- Set gradient, phase, fill time and flat-top duration, start-time, beam time, beam current/phase etc.
  - Note 1: Server will derive and download feedforward table settings which will be scaled.
  - Note 2: Scaling factors will be determined experimentally by expert
- Observe feedforward signal on DAC output
-
  - Verify that signal looks as expected (amplitude, phase, shape)
- Increase amplitude and/or phase and observe change on measured DAC signal.
- Automatically verify/adjust DSP offsets using a low drive power.
- Set HV at Klystron to 100%
- Set level of DAC voltage corresponding to output power of about 100 kW during filling, 25 kW during flat-top (this corresponds to steady state gradient of a few MV/m)
- Close rf switch and observe gradient in the cavity.
- Adjust ratio of filling to flat-top power for good flat-top conditions

2.0 Closed loop

- Adjust loop phase in open loop mode
  - Set loop phase such that phase of measured gradient agrees with setpoint (at beginning of filling)
- Change amplitude and ratio (filling to flat-top) to match measured gradient within about 10% or better.
- Determine actual loop gain and set to low gain (about 0.1). Verify correct sign of gain for I and Q
- Turn feedforward off
- Turn feedback on, loop gain set to 0.1
- Observe gradient and increase loop gain. At loop gain=1 about half gradient should be reached.
- Add feedforward and observe good match of setpoint and measured gradient and phase.
- Increase gain slowly to about 10 and observe stability of loop
- Increase gain slowly until loop starts getting unstable. Reduce gain to 50% of highest value.

- Start closed loop operation

4. Set simple standard feedforward table
5. Automatically determine and set the loop phase
6. Determine average predetuning of cavities and store this value
7. Switch off feedforward
8. Automatically determine sytem gain (using a procedure that carefully applies feed-back).
9. Run system on setpoint with Feedback only.

9a. Tune the cavities?

10. Run ten adaptive-feedforward-cycles in order to

- Beam has been turned on / off

1. Run ten adaptive-feedforward cycles and remember old feedforward tables

- Tuning the cavities

1. Run feedback-only mode at desired setpoint
2. Make a scan through different tuning positions, determine minimal reflection coefficient vs. steps

- Change the gradient / phase during normal operation (w/ or w/o beam)

1. Change DSP-Setpoint
2. Run ten adaptive-feedforward cycles

- Quickly change gradient / phase (for scanning)

1. At the same time: change setpoint phase and feedforward phase.

- Synchronize ADCs that belong to one RF-Station

1. Verify, that everything is "undangerous" (Klystron at 60%)
2. Apply some basic feedforward
3. Store current IQ-Driver table. Then load a simple table that is everywhere zero exept for one point close to the edge.
4. Scan and adjust ADC-timings until the timing is synchronous with the IQ-Driver table.
5. Reload the IQ-driver tables.

- Determine DSP Calibration Matrices

1. Verify, that Linac runs with high beam current and medium-high RF field
2. Take data, apply statistic and calculate Matrices (somehow retrieve beam current)
3. Somehow display proposed changes in amplitude/phase for matrices
4. Apply the changes on user confirmation

- Data Quality Monitoring

1. Online determination of data quality in terms of percent amplitude and degrees phase

Start-up of individual rf system without beam

1.0 Introduction

Turning-on the rf system requires a well defined procedure to establish stable operation at the desired gradient and phase of the accelerating field. It is assumed that rough calibrations for incident and reflected power, gradients, phases of cavity probe signals, and the phase of the incident wave exist. The phase of the acclererating field can only be calibrated with actual beam present in the cavities.

2.0 Setting of Parameters

The turn-on procedure is essential controlled by a sequence of proper settings of the rf system

parameters. The interaction of the various parameters is shonw in Figure 1.

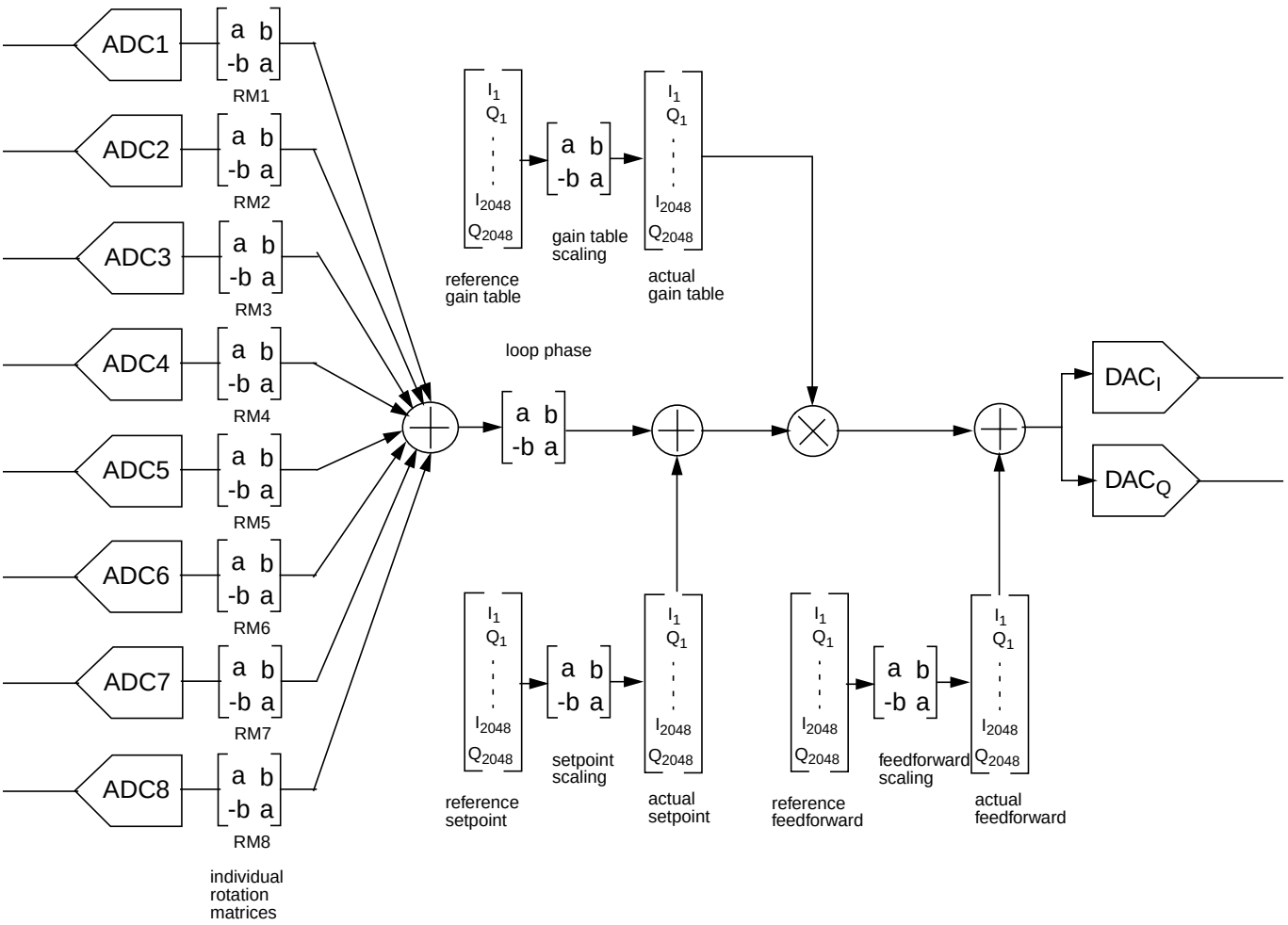

3.0 Calibration of signals

The rf hardware should be adjusted to provides a coarse calibration.

1. The amplitude of the 250 kHz signal should be 3.8147 V (=25000 / 4 / 8192*5 V) at 25 MV/m.
2. The amplitude of the 250 kHz signal for forward and reflected power should be 3.8147 V for a power level 0f 200 kW.
3. The calibration after the rotation matrix should be such that 25000 correspond to 25 MV/m. Note: The range of the ADC data is ±8192 (±5V). This number is multiplied by approx. four (4) to reflect that the DAC range is 4 times as large (16 bit DAC vs 14 bit ADC).
4. The loop phase rotation matrix should have magnitude of 0.5 to compensate the extra gain factor of two (2) between gradient measurement and forward power setting. The phase of the loop phase rotation matrix determines the loop phase.
5. The reference rotation matrix for cavity one (1) should have a phase of zero degrees and a magnitude according to 3. i.e. close to four (4). The phase of the reference rotation matrices for cavities 2-8 reflects the calibration of the vector sum with respect to cavity one (1). The magnitude of the matrices reflects the gradient calibration (value close to four (4)).

6. A DAC Control voltage of 3.8147 V on I (I=3.8147V, Q=0V) or Q (I=0V, Q=3.8147V) should produce a forward power of 1600 kW (=8*200 kW) corresponding to a steady state gradient of 50 MV/m. Note: The range of DAC control is ±32768.
7. The actual feed forward table should have a magnitude of 25000 for a steady state gradient of 50 MV/m. The rotation matrix should have a magnitude of 50000 for an induced gradient of 50 MV/m. The reference feed forward table should have a magnitude close to 0.5 for steady steade induce 50 MV/m.
8. The actual gain table is used to set the gain in the feedback loops for I and Q. The magnitude of the gain table rotation matrix is used to set the nominal gain. The phase should normally be set to zero. The reference gain table is used to calibration of the loop gain.

4.0 Principle steps of the turn-on procedure

The basic steps of the turn-on involve open-loop operation at low gradient, closing of the loop and raising the gradient to the desired value. Phase of the accelerating field will be adjusted for maximum energy gain.

1. Turn- on rf system in open loop. The incident power is matched to a steady state gradient of 12.5 MV/m i.e. 50 kW during filling (500 µs), and 12.5 kW during flat top (800 µs). Only the I input of the vectormodulator is pulsed, the Q input is held at zero.

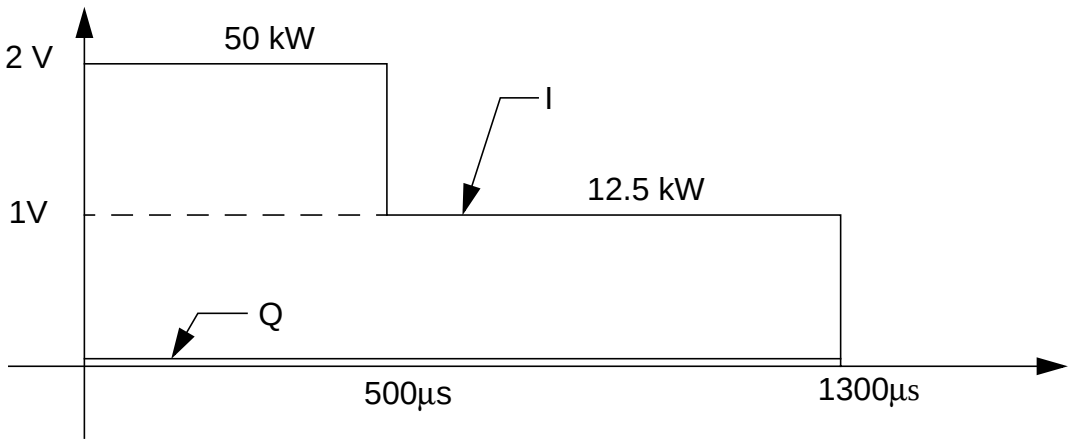

2. Observe individual cavity gradients in all eight (8) cavities. The gradients should be up to 12.5 MV/m (for 50 kW incident power). The pulses should have a flat top and the detuning at the begin of the field decay should be close to zero.

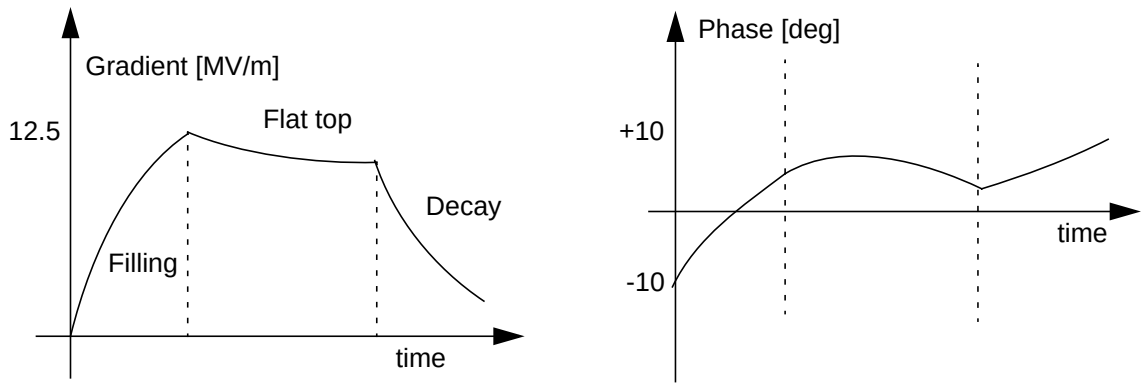

3. Move tuner if necessary to adjust predetuning to desired value (+230 Hz @ 25 MV/m, +100 Hz for 12.5 MV/m).
4. Verify that rotation matrices for the calibration of the vector-sum are correct. If your are not

sure follow the rough check in 6. or proceed with transient based phase calibration.

5. Determine loop phase from measured slope of I/Q data during the first 100 µs of cavity filling. Adjust loop phase setting such that vector of incident wave (actuator control vector) and probe signal start with same phase (= zero if only I-input is pulsed). Verify Q control by pulsing Q only (rotate feed forward table by 90 degrees).
6. Verify that individual cavity fields are approximately lined up ($\pm 10^\circ$) by measurement of the slope of I/Q data during the first 100 µs of cavity filling. The residual errors reflect the errors in the incident wave if the calibration of the vector-sum is correct.
7. Close I and Q loop with gain of 1.0. Raise gain slowly up to 100. Stop if instabilities occur or noise amplitude on forward power exceeds 10%. Check detuning angle of all cavities.
8. Activate automated tuner control.
9. Increase gradient the setpoint to the desired value in Increments of 1 MV/m. Check the stability of feedback loops. The gradient limit is reached as soon as the loaded Q of any cavity at the end of the flat top is reduced by more than 5%.

RF-GUN Start-up Procedure

-Switch both gun solenoids on and set to nominal values (165 and 90 amps respectively)
-Reset personal and klystron iterlocks if necessary.

- Check the DSP system (If the system has not been running previously, boot it by sequence and check/load settings wich corresponds to mode of operation..
- Set the gradient setpoint to zero

- turn off Feedback mode
- reset the BIS
- turn on Feedforward mode
- set gradient
- If powermeter program is not runing run it on host ttfrfproc with '/usr/teslaha/ttf/bin/pwr2doocs' and enter the calibration factor 82.57 dB.

-Carefully increase power, keeping the vacuum below 1e-9 before 3.2 MW can be applied.

-Measure and adjust the phase relative to the laser pulse by putting the BIS to Gun Mode (use the Gun Faraday cup) and measuring the charge in the cup for different RF phases.
Reduce the 'BeamPhase' until there is no signal on the Faraday cup, the increase until a 'flat top' is reached. The middle of the slope plus 40° is the target phase.

-Run calibration tool
-turn on Feedback mode
-set the P gain to 1 and the I gain to 0.5
-During operation, the feedback loop can stay enabled, switching the beam on and off .
-When phase or amplitude setpoints are changed by more than a few percent, open

the conrol loop, run calibration tool again and close the loop. (To open the control loops, disable feedback mode).

-after the occasional klystron resetings if the klystron voltage is changed it is necessery to run calibration tool

RF-GUN Phase Scan Procedure

- Check if SP gun gradient is the desired and that the Feedback is closed
- Put solenoid current to 290 A (ensures proper transmission)
- Start phase scan tool
- Reduce charge to 0.5 nC (reduced space charge effects)
- Start scan of phase versus toroid reading
- Check if the resulting curves are proper in its behavior
- Start fitting tool to determine RF phasee (more accurate)
- Repeat if you are not sure, results should be very close +-1 deg.

RF System Calibration

1.0 Signals to be calibrated

The signals to be calibrated are

10. amplitude and phase of the accelerating field in each cavity
11. amplitude and phase of the incident wave to each cavity
12. amplitude and phase of the reflected wave to each cavity
13. amplitude and phase of the incident wave to 16 cavities
14. amplitude and phase of the reflected power from 16 cavities

Since the operator is also interested in the actual incident and reflected power levels the conversion has been defined as

$$P\ [\mathrm{kW}] = A^2$$

Note: I is desirable to add a server function which allows for calibration of the power in unit of kW.

2.0 Principle of calibration

The gradient and phase calibration is based on a method which uses beam induced transients. The gradient calibration error is dominated by the error in the beam current measurement. However relative calibrations are precise (a few percent) and can be used with additional spectrometer based beam energy measurements to obtain an absolute calibration. System identification can be used transparent to operation on a continuous basis/

The calibration parameters can be obtained

- manually but assisted by transient measurement applications (calibration parameters are calculated from measured data)
- automatically using the application for vector-sum calibration

In both cases appropriate beam transients must be available.

3.0 Locations of calibration parameters

The calibration parameters exist at various locations:
- rotation matrices in DSP code (field probe)
- polynomial parameters in ADC server (field probe, forward and reflected power)
- rf calibration server
- save/restore setttings

Calibration Comparison ADC-DSP

1.0 Introduction

A comparison of the calibrations for the vector-sum in the DSP and the ADC can be used for consistency check.

2.0 Calibration Procedures

DSP calibration

In the DSP the cavity field vectors measured are multiplied by a rotation matrix to perform the calibration of the vector-sum. Reference cavity is cavity 1 of the ensemble of up to 32 cavities:

Rotation matrix for cavity 1: $\begin{bmatrix} 1 & 0 \\ 0 & 1 \end{bmatrix}_1$ and for cavity n: $\begin{bmatrix} a & -b \\ b & a \end{bmatrix}_n$. From the matrix elements one can calculate the rotation amplitude and phase according to:

$a = A \cdot \cos\phi$ and $b = A \cdot \sin\phi$ i.e.

$\phi = \operatorname{atan}\left(\frac{b}{a}\right)$ and $A = \sqrt{a^2 + b^2}$.

Remember: The calibrations are all relative to cavity 1.

ADC calibration

In the ADC the field are calibrated by use of polynomials (a,b,c) and the and the nullphase ϕ_0. The displayed gradients are calculated according to $y = a + b \cdot x + c \cdot x^2$ where x is measured in terms of ADC bits (-5V -> +5V corresponds to 0 -> 4095 where

2048 is zero Volts). The coeefficient c=0 reflected the linearity of the field detector. The calibration of the cavities relative to cavity 1 can be calculated as:

$\phi = (\phi_0)_n - (\phi_0)_1$ and $A = b_n / b_1$

$\phi = (\phi_0)_n - (\phi_0)_1$ and $A = b_n / b_1$

Feedforward and Feedback Parameter Adjustment

1.0 Introduction

During RF system operation is may be necessary to adjust parameters in the feedforward and/or feedback section to reflect changes in rf system parameters such as klystron gain.
This is especially true when turning to the rf system on after a longer shutdown.

2.0 Procedures

- Match feedback parameters to feedforward settings
- Match feedforward parameters to feedback settings
- Match feedforward parameters to setpoint tables
- Match feedback parameters to setpoint tables

3.0 Match Feedforward to Setpoint

3.1 Modell based method

15. Load gradient calibration for vector-sum
16. Calculate forward power needed during fill and flat-top for given fill-time, gradient , loaded Q and beam loading. Determine ration parameter.
17. Calculate DAC voltage settings as function of klystron voltage. Set DAC voltage and observe measured vector-sum
18. Perform fine tuning of flat-top power, ratio (fill-power) and beam compensation parameters
19. Set phase setpoint as needed.

3.2 Experimental method

1. Set low power default pulse with correct time structure and ratio=0.5
2. Adjust ratio to obtain a flat-top
3. Scale FF table until the desired gradient (flat-top) is reached

4. Set phase as needed.
5. Adjust beam loading parameters with beam

I) Preparation Phase (~once per day, or on every restart of the rf)
1) Offset Calibration
2) Loop Phase Determination
3) System Gain Determination
4) Predetuning of Vectorsum Estimation
5) Tuning of the Cavities
7) Synchronize ADCs of one RF Station
20) LO-Generator-Optimization
22) Klystron Linearization (?)

II) Pre-Preparation Phase (~once per week, or on request)
5) Tuning of the Cavities
8) Calibrate DSP Matrices
13) Adjustment of Waveguide Tuner

III) During "Normal Operation" (~every minute)
6) Adapt Feedforward
9) Monitor Data Quality
10) Consistency Check
11) Interlock Reset
12) Calculate Detuning and Bandwidth
14) Momentum Management
18) Calibration of Forward and Reflected Power
19) Beam Phase Measurement
20) LO-Generator-Optimization
21) Track Frequency of RF Gun During Warm-Up
23) Kryo Heatload Calculation
27) Hardware Diagnostics

IV) Procedures, that require Beam
8) Calibrate DSP Matrices
19) Beam Phase Measurement

V) Procedures that should not run with Beam
18) Calibration of Forward and Reflected Power (in principle my algorithm could run

with beam, too)

VI) Procedures that will be invoked after a two-month-shutdown :)
...somehow make the klystron work...
1) Offset Calibration
7) Synchronize ADCs of one RF Station
20) LO-Generator-Optimization
10) Consistency Check (Kables plugged in correctly?)
2) Loop Phase Determination
3) System Gain Determination
30) Adjustment of Amplitude and Phase (roughly)
5) Tuning The Cavities (Assuming that they were not completely detuned.)
2) Loop Phase Determination (again)
3) System Gain Determination (again)
30) Adjustment of Amplitude and Phase (again)
6) Adapt Feedforward
13) Adjustment of Waveguide Tuner (only if beam is available)
8) Calibrate DSP Matrices (only if beam is available)
31) Close the Loop and increase Feedback Gain

1) Offset Calibration
Objective:
Get rid of constant (although slowly drifting) offsets induces by the vector modulator.
Prerequisites:
o No beam operation.
o Klystron is operating at secure HV-level (e.g. 80%).
o No feedback operation.
Procedure:
Set zero output at the DSP-DAC. Observe probe of some cavities. Scan through I- and Q- offset until the probe response is minimized.

2) Loop Phase Determination
Objective:
Set the phase advance of the whole control loop to an integer multiple of 2?.
Prerequisites:
o Klystron is operating.
o No feedback operation.
o Offsets are correct.
Procedure:
Scan through loop phase. Observe Vectorsum phase until it matches the setpoint phase. Or: apply small bump on feedforward table and evaluate output.

3) System Gain Determination
Objective:

Determine system gain. (Necessary for gain estimation or for feedforward adaption.)
Prerequisites:
o Klystron is operating.
o No beam operation.
Procedure:
Apply small bump on feedforward table and evaluate output. The system gain needs to be determined for different gradients individually!

4) Predetuning of Vectorsum Estimation
Objective:
Determining the detuning in the beginning and in the end of a pulse and approximating linearly in between is the simplest and often sufficient way to dertermine the detuning.
Prerequisites:
o Klystron is operating.
o Offsets are correct.
o The DSP matrices have been adjusted correctly.
o Apply constant phase in the beginning of a pulse.
Procedure:
Look at the phase derivative in the beginning of the pulse.

5) Tuning of the Cavities
Objective:
It is desirable to have the zero-crossing of the detuning of the cavities in the center of the flattop. Since the Lorentz-Force depends on the gradient, the optimal frequency where this condition is fulfilled depends also on the gradient (in case of active lorentz force compensation,
this objective is not longer valid). In addition, when modules are re-commissioned, the frequency is unknown and therefore needs to be adjusted.
Prerequisites:
o Klystron is operating approximately at the desired gradient.
o Setpoint is approximately at the desired gradient.
o Feedforward curve is rather well adjusted.
o Tuners are working. The frequency needs to be already within a few bandwidths.
o Feedback if off.
Procedure:
Scan through different tuner settings until the reflection coefficient is minimized in the center of the flattop.

6) Adapt Feedforward
Objective:
Optimize the feedforward tables such that the feedback has not much work left during the flattop.
Prerequisites:
o Klystron is working.
o Offsets, loopphase and system gain are adjusted.
o Feedback is on or off.
o Beam is on or off.
Procedure:
Adapt feedforward in an iterative fashion.

7) Synchronize ADCs of one RF Station
Objective:
Let all ADCs trigger at the same time with respect to the LO generation.
Prerequisites:
o If system is uncalibrated: let system run at secure lecel.
o If system is well adjusted: let system just run in feedforward mode.
Procedure:
Apply single nose on the LO-tables. Then scan through ADC-timing until they see this single nose.

8) Calibrate DSP Matrices
Objective:
In order to calculate the Vectorsum correctly, the individual probe signals of the cavities needs to be calibrated in amplitude and phase.
Prerequisites:
o The power-distribution (amplitude and phase, 3-stub-tuner) has been adjusted.
o System ist running with beam and feedforward only.
o It might be an advantage to run with a standard FF table (constant on flattop)
Procedure:
Evaluate beem transients and derive settings for DSP matrices.

9) Monitor Data Quality
Objective:
Have a direct measure of the quality of the RF pulse in terms of phase- and amplitude stability, eventually take into account pyro- or other detectors to calculate beam phase readback.
Prerequisites:
o System is making RF-pulses.
Procedure:
Record data and evaluate it.

10) Consistency Check
Objective:
Make a number of checks before system startup (cables connected correctly? hard-ware available?)
Prerequisites:
o None.
Procedure:
To be developed.

11) Interlock Reset
Objective:
In case of an interlock, the state machine should reset interlocks for a certain amount of times.
Prerequisites:
o An interlock occured.
Procedure:
Check severity of interlock, eventually reset it and count the number of resets.

12) Calculate Detuning and Bandwidth
Objective:
Provide a display of the detuning for certain cavities for manual inspection.
Prerequisites:
o RF is going in the cavity that is to be observed.
Procedure:
Evaluate data and provide display.

13) Adjustment of Waveguide Tuner
Objective:
It is necessary to have the power distribution system of a set of cavities that belong to one module calbrated in such a way, that the rf power approaches at the cavity input coupler in the same phase and at the desired level of attenuation.
Prerequisites:
o Offsets are adjusted etc.
o Medium to high beam current operation w/o feedback.
Procedure:
The algorithm will evaluate beam transients and give suggestions on how to adjust the waveguide tuner. At present, this will be done manually. The procedure already fore-sees an automativ adjustment of this part.

14) Momentum Management
Objective:
Certain cavities might run on lower gradient, e.g. due to quenches. This needs to be compensated by the other cavities in a vectorsum.
Prerequisites:
o There is a need for momentum management.
Procedure:
To be developed.

15) Exeption Handling
Objective:
An exception occured.
Prerequisites:
An exception occured.

Procedure:
Detect exception. Decide what to do.

16) Save and Restore Settings
Objective:
Save and restore all or a subset of the settings (mainly DSP parameters).
Prerequisites:
o No RF should be applied at least during "restore"
Procedure:
Save and restore settings.

17) History
Objective:

Provide a history for important values.
Prerequisites:
o None.
Procedure:
Automatically record data.

18) Calibration of Forward and Reflected Power
Objective:
The forward, probe and reflected power signals are in arbitrary phase / amplitude relationship with respect to each other. Additionally, one has to deal with offsets. This needs to be corrected.
Prerequisites:
o Data available from individual cavities or the klystron.
Procedure:
Calculate calibration parameters.

19) Beam Phase Measurement
Objective:
Have a reliable read-back value for the beam phase.
Prerequisites:
o Run with beam and feedforward only (Maybe feedback, too? I don't know.)
Procedure:
Look at data and calculate beam phase.

20) LO-Generator-Optimization
Objective:
A wrongly adjusted LO induces noise in the system. The purpose of this procedure is to reduce this noise.
Prerequisites:
o Unknown so far.
Procedure:
To be developed.

21) Track Frequency of RF Gun during Warm-Up
Objective:
Reduce the time it takes to have the RF gun at the correct temperature and therefore correct frequency.
Prerequisites:
o RF gun is warming up.
Procedure:
To be developed.

22) Klystron Linearization
Objective:
Linearize the klystron in order to have reliable amplitude and phase translation from DAC output to the cavities.
Prerequisites:
o To be developed.
Procedure:

To be developed.

23) Kryo Heatload Calculation
Objective:
Calculate the cryo heatload.
Prerequisites:
o To be developed.
Procedure:
To be developed.

27) Hardware Diagnostics
Objective:
Keep track of hardware status.
Prerequisites:
o To be developed.
Procedure:
To be developed.

28) Database with Calibrations
Objective:
Save and restore calibrations.
Prerequisites:
o To be developed.
Procedure:
To be developed.

29) Database with Operational Limits
Objective:
Deliver a basis for decisions like "is this dark current too much"?
Prerequisites:
o To be developed.
Procedure:
To be developed.

30) Adjustment of Amplitude and Phase
Objective:
On user request, the state machine should set amplitude and phase of the rf to the desired setpoint value. Together with this might go a set of optimizations.
Prerequisites:
o Klystron is operating.
o Machine is able to provide a read-back value for amplitude and phase.
o
Procedure:
To be developed.

31) Close the Loop and increase Feedback Gain
Objective:
Close the feedback loop.
Prerequisites:
o Klystron is operating.

o Offsets, loop phase, system gain are estimated
o Consistency check has been performed
Procedure:
To be developed.

Some comments on Stefans "Functionality required for the FSM for LLRF"

01 "start-up of individual rf system without beam": The individual system startup will be covered by a sequence of procedures listed above. It will be part of the FSM logic to invoke the correct sequence.

02 "preparation of rf system for beam operation": Same as above (01), but the sequence might be different.

08 "turn on - off klystron": This task is left to the klystron state machine.

09 "fault recovery": Recovering from a fault is done by the exception handling procedure.

10 "performance optimization": for different performance-parameters there are different procedures. For example, the feedforward tables are optimized by the adaptive feedforward. Or: the loop phase is determined by another algorithm.

21 "quench detection": I think, this is covered by the bandwidth measurement.

-The loop phase tool is used to adjust the loop phase which must be set correctly before applying feedback.

The Loop phase tool must be used before using feedback first time.
It must also be applied whenever the phase shifter to cavities are adjusted or the klystron voltage is changed.

The loop phase measurement is correct if the indicated error is small (< +- 5 deg.).
The loop phase tool will change the phase of the accelerating field by the delta by which the loop phase is changed. Change setpoint phase accordingly as needed.

If the phaseshifter to module 1 is changed (converting to or from bunch compressor operation), activate Loop phase tool immediately before and again after change. This ensures that the loop phase is correct while the phase of the accelerating field remains unchanged if it was ok after applying the loop phase tool before the change.

The BEAM PHASE tool is currently inactive

4.1.3The "RIPPLE" tool compensates the 250 kHz ripple on the measured vector-sum. It should be always applied before applying feedback and whenever the measured vector-sum or DAC signal show excessive ripple.

NOTE : The "Ripple Load" must be initiated when changing the setpoint phase by more than 20 degrees to guarantee optimum performance.

4.1.4The "ADAPTIVE" feedforward is used to maximize the performance of the rf system. The feedforward table will be automatically (iterative process) be adjusted to achieve best possible agreement between measured vector-sum and set-point table. It can be used in open- and closed-loop configuration.

4.1.6"Vector-Sum" displays the vector-sum as measured by the DSP.

Implementation of FSM server for RF System

The RF Control System employs a completely digital feedback system by means of 7 DSPs. Presently 16 cavities are driven by one 10 MW klystron.
The picture shows the main DDD panel for RF operation on the modules.
Operator can change RF parameters - the set point voltege and the set point phase releative to the beam. Operator has an option to change feedforword or feedback modes, to swich on or off beam loading compencation, which is important for pulsed accelerator. Here is shown klystron status and status of technical interlock. Operator is alow to open expert panel to make additonal changes. Here one can see amplitude and phase of measured vector-sum of 16 cavities. Blue line indicates the set point value and black line is measured. Here operator can aplay FSM server for operation or change the mode of operation to manual. Here one can see RootState which is always active.
The FSM server for RF System consist two main SuperStates:
Control manager and Tools.
The control part is responsible for RF field control and includes following states and superstates:
MANUAL, NULL, SAFETY_IL, CONTROL
IDLE, RF_STDBY, HV_ON, RF_ON
IDLE stae includes 3 parallel flows, each of them describes part of RF releated low-level device serveres prformance.
ADC, I/Q driver and DSP servers.
The main futures for IDLE state are:
check RF system releated hardware status
start-up the RF system:
Control action for DSP server to load and to start appropriate control programs in DSPs
Load all required by the RF Control System parameters.

Change some parameters of control system
if system is not running yet init DSPs and restore the previous
(or other desired) settings
check/restore ADC, DSP, I/Q-driver operational settings
check/restore calibration parameters of individual cavities

RF_STDBY SuperState provide the control of low level device servers like
klystron, and technical interlocks for module 1 and module 2.
This state is RF main diagnostic mode:
check and reset interlocks
find source
check limits
if reset impossible or many resets show source of interlocks(error state).
collect statistics on reliability of the components.

RF_ON includes 2 parallel flows . First one describes status of RF feedback loop.
Here server is duing following:
check DAC output, perform low power test
correct the Offsets of the vector-modulator
adjust feedforward parameters to aproximate operating gradient
determine loop phase
verify cavity detuning, activate tuner if necessary
check loaded Q
adjust closed loop parameters to match open behavior approximately
control and calibrate the feedback Gain.
In beam operaton flow server is trying to:
determine beam current and beam phase and set the known beam current and beam phase correctly to the DSP server.
"enable" the beam loading compensation
minimize the transient on the Vector-Sum by optimizing the beam loading compensation
"disable" the beam loading compensation (if beam is off), which is inportand in long pulse mode operation

A variety of automated procedures are available from the tools SuperState, which assist the operators to maximize the performance of the RF System
Simple example can be sytematic error correction(ripple), which comes from our digital feedback sytem from down
conversion of 1.3 GHz RF signal to 250kHz intermediate frequency
One can see RF field without and with this correction.
or Cavity detuning measurement and correction tool. Here one can see
cavity number and here cavity detuning in Hz.
Finally our Finite State Mascine implementation looks like this, wher one can se all elements - all hierarchy of States, Superstates and relation in between.

Coupler Technical Interlock

- 3 times e- (charged particles)
- light in coupler vacuum
- light inwave guide (air side)
- temerature cold ceramic
- temperatur warm ceramic
- vacuum coupler
- vacum cavity
- bias voltage
- cryogenic OK

----> low level RF gate on klystron (connection to BIS foreseen)

Look at: http://www-mhf.desy.de/desy/ttfadm/doc/ttf2/til_usage/ttf2_til_usage_fsm.html

TTF2 TIL usage

Describtion of available TIL signals, and how to operate with the interlocks

Signals per coupler:

- LUWG Spark
- LUVA Photomultiplier
- e- Detector 1
- e- Detector 2
- e- Detector 3
- T300K IR/PT temperature
- T70K PT temperature
- Ubias

Not all signals on all couplers are available, but if the signal is missing, the system will give us a “ok” message. So we will check always all possible channels !

Figure x.

Additional Signals per accelerator module:

- Cavity Vacuum
- Coupler Vacuum
- He summary (cryogenic)

The cryo system is separated in two parts:
For the first accelerator module
And for all other accelerator modules

- He level min (values need to be chacked)
- He level max
- He pressure
- (spare)

- **How it is combined ?**

Reset distribution:
If an interlock frame get a reset from a DOOCS client, it will be distributed to all frames in the same group. One group is defined by the RF distribution. Existing groups today (14.06.2005):

- ACC1, that means: All couplers of ACC1, the cavity and coupler vacuum and the cryogenic summary of ACC1 is connected together.
- ACC2 and ACC3 (all couplers, vacuums, cryo. summaries).
- ACC4 and ACC5 (all couplers, vacuums, cryo. summaries).

Note:
We did NOT talk about the cryo system; only about the summary cards.
That means you (or better a person with the cryogenic feeling) should reset the cryo system independantly BEFORE you try to reset one of the three rf groups (mentioned before).
(It is not danger, if you try this; it is simply not possible.)
The main reason for this independent latch per accelerator module is the separation of rf controls.
For example:
The He level is not right, and the interlock of the cryo system will drop the “ok” signal for the modules acc2 ... acc5 (in the moment). That means there are two RF systems (acc2&3 and acc4&5) switched off. Each system can try to reset there own interlock group (without success). If someone (maybe one of the mentioned both RF systems or

better a cryo expert (process ?)) reset the cryo system; there is still a reset per RF (interlock) group needed, before the RF switched on again.

The important point on this
ONLY the responsible process of one RF/interlock group can reset there own interlock.
So it is NOT possible, that a second RF system will be able to reset our RF/interlock group, without a chance for us to manage our LLRF system before (that means: switch of the regulation loop!!! And reduce the RF power).

- **How to know the interlock state of one group ?**

There are two way's possible

- Fast:

Read the "group status" of one coupler interlock frame. This is a "or wired" signal of all frames in one group.

BUT:

We had not enough time up to now, to add the vacuum and cryo (summary) status. That means in the moment you need to read this 3 bits / acc. additionaly.

- Detailed:

Read all coupler status bits (8 bits / coupler or 16 bits / frame) and additional the 2 vacuum and the 1 He summary bits (per accelerator module).

The detailed cryogenic status is only needed for the process, which will be permitted to reset them.

- **If a interlock event happens, how to proceed (figure x)?**

(This describe the behavior of one RF/TIL group (so you will have in the moment three independent tasks of them (acc1, acc2&3, acc4&5)).)
1. Stop LLRF loop !
2. Reduce driving power.
3. Check state of all TIL channels. React depending on the type of channels, which throw an alarm. (You will see that I talk about counters: Such a counter is needed per channel (not per type).)

LUWG Spark

If you count >2 Events in the last 60min or >4 Events in the last 24h then stop RF and call the "Rufbereitschaft of MHF-sl"!
If the beam hit the wall (beam tube or cavity) such a TIL event can be thrown by this (just for information).
If the counter is not on such a limit, but there was a spark event: Wait 3min and start the RF slowly (ramp in 1min to 50% of the fail power; and in further 9min up to 100% (if it was a known working power level! otherwise reduce the operating power)).

LUVA Photomultiplier or
e- Detector (there are three of them)

If you count >3 Events in the last 20min then you should reduce the operating power; or adjust the loop phase and/or the frequency tuning of the cavities.
If you get more than one signal from the same coupler then wait 3min otherwise 1min after such a event.

T300K IR/PT temperature or
T70K PT temperature

If you count >2 Events in the last 24h and the cryo system is ok (not for T300K) then call the "Rufbereitschaft of MHF-sl"!

Wait 3min after such a event.

Ubias

If you count >2 Events in the last 60min or >4 Events in the last 24h
then call the “Rufbereitschaft of MHF-sl”!
(If there is a strong reason for such a event, it will be not possible
to reset this.)
Wait 1min after such a event.

Cavity Vacuum or
Coupler Vacuum

If you count >2 Events in the last 60min or >4 Events in the last 24h
then call the “Rufbereitschaft of MHF-sl”!
After such a event reduce the operating power; or adjust the loop phase
and/or the frequency tuning of the cavities.
Wait 3min after such a event.

He summary (cryogenic)

Such a event cannot be reset before the cryosystem is checked and
managed by a different process.
The best would be this (our) process will get a notification from the
cryo management process, what the state is. (The second not so nice
possibility is: Know which channels corresponds to this RF/TIL group,
and check if they are ok. The third really worse possibility: Try to
reset. (no))
This depends on your implementation.
After such a event reduce the operating power; or adjust the loop phase
of the cavities.
Wait 1min after such a event.

4. If the rules allow this and you wait the defined time, send a reset
to one frame of the RF/TIL group.
(It is permitted to sent such a reset to more than one interlock frame
of the same group, but this should be done in the same moment. (Do not
wait in between; otherwise it will create a reset burst on the bus which
can destroy the RF components.))

5. Start the RF system.
In some cases you need to ramp the power, so it would be fine when you
use this ramp always.
If we did not give a ramping time, some pulses would be very nice !
(For example: 50%, 75%, 85%, 90%, 95%, 98%, 100% each for 2s)

FSM for such a procedure should be able to read the counter values.

How to know the interlock state of the cryogenic TIL ?
The only way is to read the interlock state of the 8 cards.

If a cryogenic interlock event happens, how to proceed ?
(This is for the cryogenic management process, which will watch our He
level and pressure cards (and the spare card).)
(This process can NOT be divided in 2 groups ((each 4 cards), one for
ACC1 cryogenic; the second one for ACC2...ACCinf), because there is only
one reset command possible for all 8 cards (that means if you don’t want
to reset one of both parts, you cannot reset the other one (up to now we

believe this is not a problem)).)

1. Check state of the 4 channels (= one cryo system).
React depending on the type of channels, which throw an alarm. *He level min*
Look at the cryo system, the level should be >40%
(The level will be checked analog, so the value can not be given exacly.)
If the level is not ok then wait 20s and check it again.
If the level is not ok then call the cryo experts !
otherwise it can be that a cavity was strong on the limit.
He level max
Look at the cryo system, the level should be <50%
(The level will be checked analog, so the value can not be given exacly.)
If the level is not ok then wait 20s and check it again.
If the level is not ok then call the cryo experts !
otherwise it can be that a cavity was quenched.
He pressure
Look at the cryo system, the pressure should be <38mbar
(The pressure will be checked analog, so the value can not be given exacly.)
If the pressure is not ok then call the cryo experts !
(spare)
We don’t know in the moment. (Try to reset.)

2. If the rules (and a given cryo expert) allow this send a reset to the cryo interlock frame.

3. After a reset wait 1min before you check/try the interlock again.

Interlock Rerset Procedure

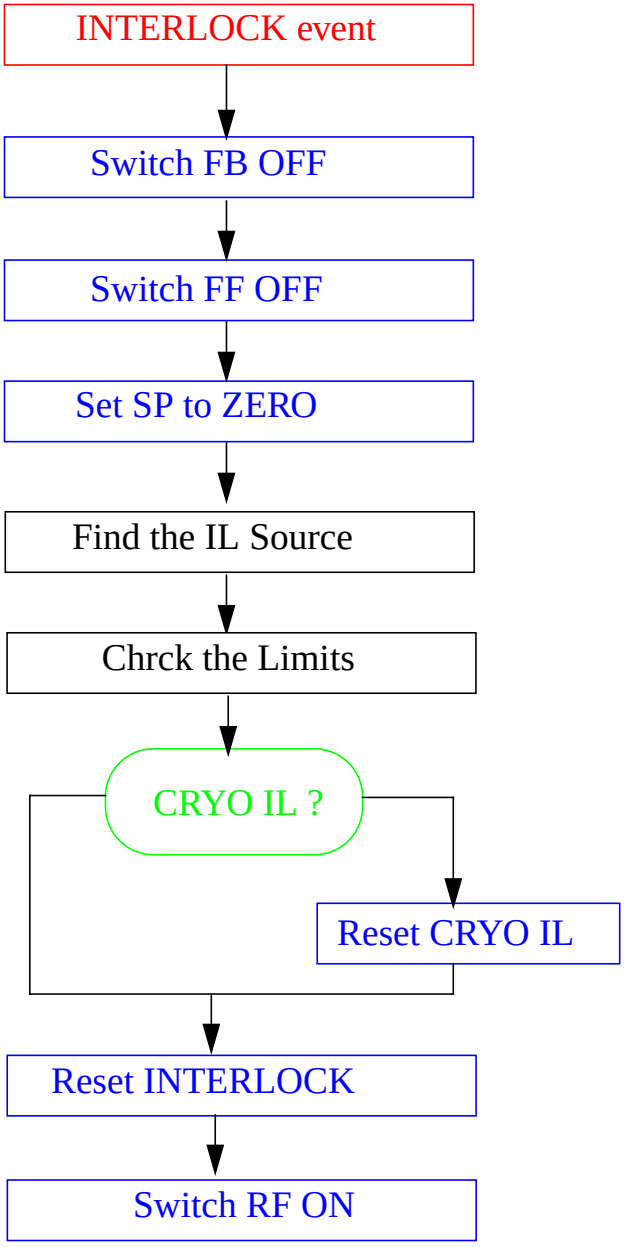

Figure x: Interlock Resret Procedure.

Set-up LLRF Timing

Basic Functions:

6. Set start time $t_{rfstart}$ of rf power pulse (identical to begin of cavity filling) with respect to A6
   - This time is the reference for all other rf relevant timings
   - This time must be set for the trigger for DSP ADCs and monitoring ADCs
7. Set start time of HV pulse t_{HV} with respect to $t_{rfstart}$. Set HV pulse duration Δt_{HV}
   - Trigger for klystron modulator must be set accordingly
8. Ensure that timing changes do not result in phase jumps (multiple of 90 degrees if timing changes are not multiple of 4 µs due to I,Q,-I,-Q sequence).
9. Set fill time t_{fill} with respect to $t_{rfstart}$
10. Set flat top duration $t_{flattop}$
11. Set start time t_{gate} with respect to $t_{rfstart}$ and duration Δt_{gate} of rf gate
12. Set start time of beam t_{beam} with respect to A6 and beam pulse duration Δt_b
    - Includes start time of laser pulse and flashlamps

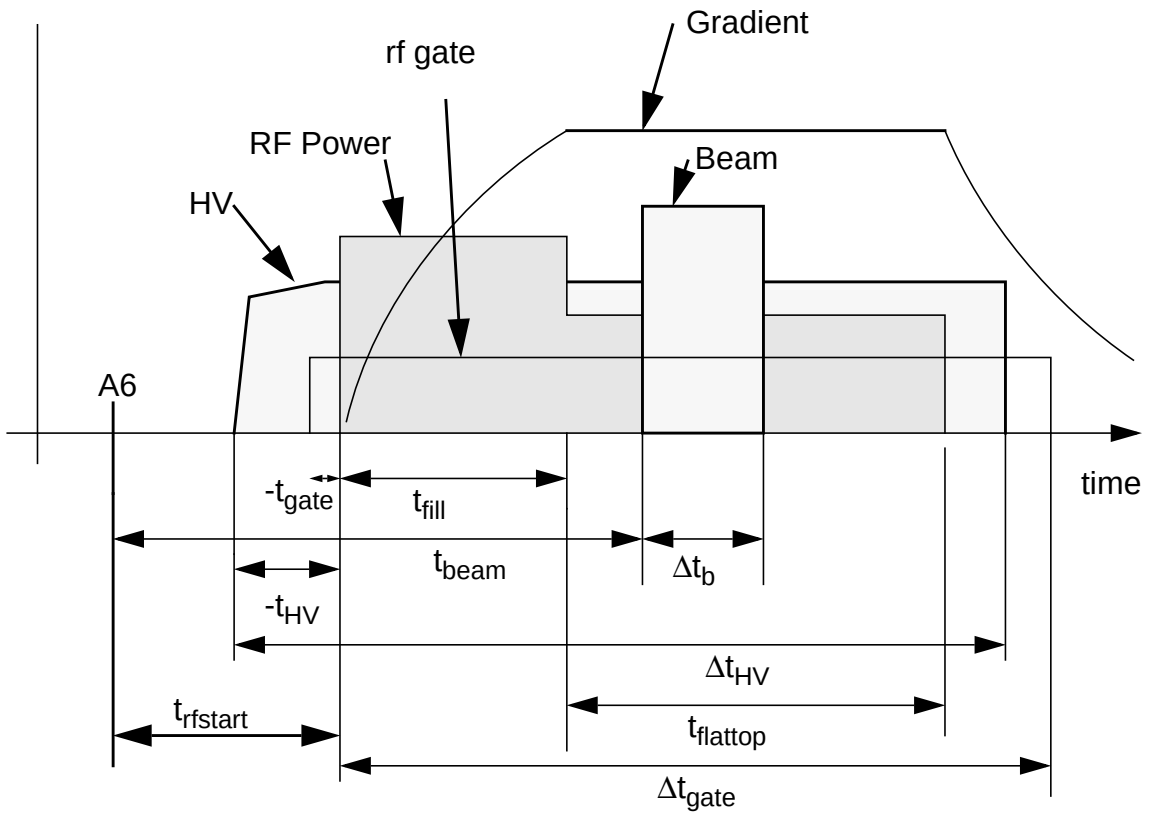

13. Synchronisation of feedforward table changes with bunch charge changes must be possible. Example pulse n runs at 1 nC and n+1 with 2 nC, then feedforward

table must change in synchronism for pulse n+1

14. Timing server which provides information about all operationally relevant timing relationships in TTF II. Example it provides timing difference between laser pulse and begin of rf flat-top or sample time of toroid and begin of bunch train.
15. Automated set-up of timing for ADCs for rf measurement such that sample is taken in the middle of the 1 microsecond step from the downconverter. This timing must be guaranteed. This means that a change in ADC timing by 5 us should give same phase and maintain measurement in middle of step.
16. 9 MHz clocks for some ADC channels in RF gun control, EOS and others
17. Save and restore and organize the timing settings (sr / data base?)

Automatic Cavity Resonance Control

Objective:

- Maintain time averaged peak detuning ($|\Delta f|_{max}$) of cavity fundamental mode frequency during flat-top region within specified limits ($+-\Delta f_{tun}$).

  Note 1: In other words: Ensure that peak power requirements are within specified limits.
  Note 2: Detuning will change during pulse as result of dynamic Lorentz force detuning. Other sources are microphonics (fast, of the order of a few Hz) and He-pressure changes (some 10 Hz / day).

Procedure:

1. Set limits for cavity detuning. Example HI-limit +- 50 Hz and L0-limit +-20 Hz
2. Determine sensitivity of each tuner i.e. how many Hz/step.
3. Measure peak cavity detuning during flat-top. At gradients below 20 MV/m measurements of the detuning at the end of the pulse is sufficient.
4. Determine time average over microphonics (10 -100 measurements)
5. If cavity detuning exceeds specified HI-limit operate tuner for appropiate number of step (determined by sensitivity of tuner). If cavity detuning is within HI-limit continue with step 3.
6. Repeat detuning measurement.
7. If cavity detuning exceeds specified LO-limit operate tuner for appropiate number of step (determined by sensitivity of tuner). Continue with step 6. If cavity detuning is within LO-limit continue with step 2.

   Note 1: stop if temperature of motor exceeds given limit (typ. 30 K)
   Note 2: stop if daily number of steps budget is exceeded (typ. 30000)
   Note 3: no action if detuning measurement is faulty and results in unreasonable number of steps
   Note 4: No action if cavity detuning exceed given limit (typ. +- 10 KHz).
   Note 5: Archive total number of steps moved, cavity detuning, and tuner motor temperature.

Limit Table Generation for Exception Handling

1. Adjust feed forward and feedback parameters for operating gradient without beam loading Gradient on cavities should be close to possible high gradient.
2. Check and find exact limits for I and Q Values by rotating phase of RF station by 360 degrees. This depends of coarse from vector modulator, amplification level of control signal in each stage. For each RF station it should be done separately and values can be completely different.
3. Read Set point table (MIX table), or read several pulses of Vector Sum table (MIX table) and do averaging.
4. Generate TEST table
5. Put error limit tables maximum in range, let say 8000

6. Add threshold for I value during cavity filling time, according defined limit
7. Add threshold for I value during cavity flat-top, according defined limit
8. Add threshold for Q value during cavity filling time, according defined limit
9. Add threshold for Q value during cavity flat-top, according defined limit
10. Pass the beam trough the module/modules,
11. Achieve full transmission with high charge
12. Adjust beam loading compensation.
13. Switch on exception handling flag
14. Re-adjust beam loading compensation whenever beam current is changing

Note:
Use signal editor tool to adjust tables. This tool should be modified.

!Start-up Procedure TTF Linac RF systems after controlled access

---
check “Magnetfreigabe” and “Strahlfreigabe”
#switch on RF, gun and all modules (klystron 2 and 3 in the hall, others remotly)
*klystron 3 (gun): stop/start switch to start, reset all resets
ramp up voltage to 127: ‘Modules’->’Klystron 3’->’Set HV (kV)’ (corresponds to Poti 9.5)
*klystron 2 (ACC1): stop/start switch to start, reset all resets
ramp up voltage to 110: ‘Modules’->’Klystron 2’->’Set HV (kV)’ (corresponds to Poti 8.1)
*klystron 4 and 5: ‘Modules’->’Interlock summary’->’Mod Details’: 1. ‘RESET’ 2. ‘HV-Mod.’ 3. wait
#Switch on Gun and modules:
*Check if feedback is off
*put feedforward on, observe gradients, ramp up to the correct SP
*put feedback gain to zero, close feedback, ramp up gain slowly to previous value (usually 20)
#switch on laser flashlamps
#do you have transmission?

Start-up Procedure TTF Linac RF system after a break of the interlock

- switch on RF, gun and all modules (remotly)

*klystron 3 (gun): start/stop switch to start, reset all resets, charge switch on
ramp up voltage to 127: ‘Modules’->’Klystron 3’->’Set HV (kV)’ (corresponds to Poti 9.5)
*klystron 2 (ACC1): start/stop switch to start, reset all resets, charge switch on
ramp up voltage to 110: ‘Modules’->’Klystron 2’->’Set HV (kV)’ (corresponds to Poti 8.1)
*klystron 4 and 5: ‘Modules’->’Interlock summary’->’Mod Details’: 1. ‘RESET’ 2. ‘HV-Mod.’ 3. wait
#Switch on Gun and modules:
*Check if feedback is off
*put feedforward on, observe gradients, ramp up to the correct SP
check loop phase
*put feedback gain to zero, close feedback, ramp up gain slowly to previous value (usually 20)

#check in the BIS panel, if at least one mode is defined
*you should have FEL or BYPASS mode
*if not, use the BIS panel info and check dipol settings, if valves are still closed, required magnets are on, screen in the GUN section, screen in undefined positions etc
*you should have short pulse mode
*if not, screen are inserted, move them out
#switch on laser (if not running already)
*start PTO, correct Piezo voltage if required, switch slow feedback on
*start diode amps
*start flashlamp power supplies (if off), start flashlamps
*check iris (flag on the laser panel): should be at 3.5 mm diameter
*check if virtual cathode is out (flag on the laser panel), if not move it out
#set the charge to 1 nC at T1, use the flashlamp SP for this
#check how far the beam goes
*use steerers H/V4TCOL to dump the beam in the collimator if in FEL mode
*observe losses in the undulator, keep watching them

#check phase of rf gun
*do gun phase scan
*change the phase, until you have charge at T1
*find the charge threshold phase (approx. -89 dg), substract 38 dg (-> -127 dg)
*charge threshold: lower phases -> charge, higher phases -> no charge
#check phase of ACC1
*move 3BC2 screen in, 1 nC, >10 bunches
*use the ‘magnets’ -> ‘BC2 setup’ to check the dipole settings: energy must be 127 MeV
*change the SP phase (10 dg steps) until you see beam, tune to minimum energy spread (beam looks smallest in horizontal plane),
*go to 1 bunch, repeat fine tuning
#phases ACC2/3
*insert 11BC3, 1 nC, >10 bunches
*use the ‘magnets’ -> ‘BC3 setup’ to check the dipole settings: energy must be 380 MeV
*change phase of ACC2/3 until you observe the beam
*set to smallest horizontal spotsize, repeat with 1 bunch
#phases ACC4/5

*if in BYPASS mode:
*insert 6BYP, 1 nC, 2 bunches
*use the ‘magnets’ -> ‘BY - COLL - DUMP setup’ to check the dipole settings: energy must be 445 MeV
*change phase of ACC4/5 until you observe the beam, if required gradient as well
*you may adjust the phase roughly using charge transmission, toroid 1 TCOL
*set to smallest vertical spotsize
*if in FEL mode
*put steeres H/V4TCOL back to default (0 A)
*use H/V12SEED to dump the beam before the undulator
*insert 5ECOL, 1 nC, 2 bunches
*use the ‘magnets’ -> ‘BY - COLL - DUMP setup’ to check the dipole settings: energy must be 445 MeV
*change phase of ACC4/5 until you observe beam, if required gradient as well
*you may adjust the phase roughly using charge transmission, toroid 1 TCOL
*set to smallest vertical spotsize (nominal beam size horizontal x = 97 um, vert. y = 54 um)

Software Test

DSP Code Test
---

1. Set reference tables for setpoint (SP), gain (GT), and feedforward (FF) to

   - for SP : 10000 on I and 00000 on Q
   - for GT : 15,000 on I and 00000 on Q
   - for FF : 20000 on I and 00000 on Q

2. Set cavity rotation matrices (RM1....RM8) to

   - cavities 1-8 to AMP = 10000 PHASE = 0 deg.

3. Set rotation tables for SP, GT, and FF to

   - AMP = 1 and PHASE = 0 deg.

3. Set rotation table for rotation matrices (i.e loop phase)

   - AMP = 1 and PHASE = 0 deg.

4. Verify that all actual tables and rotations matrices are

correct. They should be identical to the reference tables and matrices.

5. Rotate SP, GT, FF by -10, -20 and -30 deg. respectively. Verify rotation of actual tables.

6. Rotate RM1 ... RM8 by 10,20,30,40,50,60,70,80 deg. Verify rotation of actual rotation matrices.

7. Change amplitude oi all rotation matrices by factor of .5 first (then 1.5) and verify correct change in magnitude.

8. Change all AMP = 1 and all PHASE=0 deg. and verify that actual tables agree with reference tables like in the beginning of the test.