Modern fast AD converters, what performance we can really get?
How many bits are feasible?

Example: LHC Beam Phase/Transverse Position VME module

For both applications noise is an essential issue.

16-bit AD converter (AD9446), DC coupled to the driver, 40 MHz sampling rate, no averaging possible. We can have only one sample per bunch.

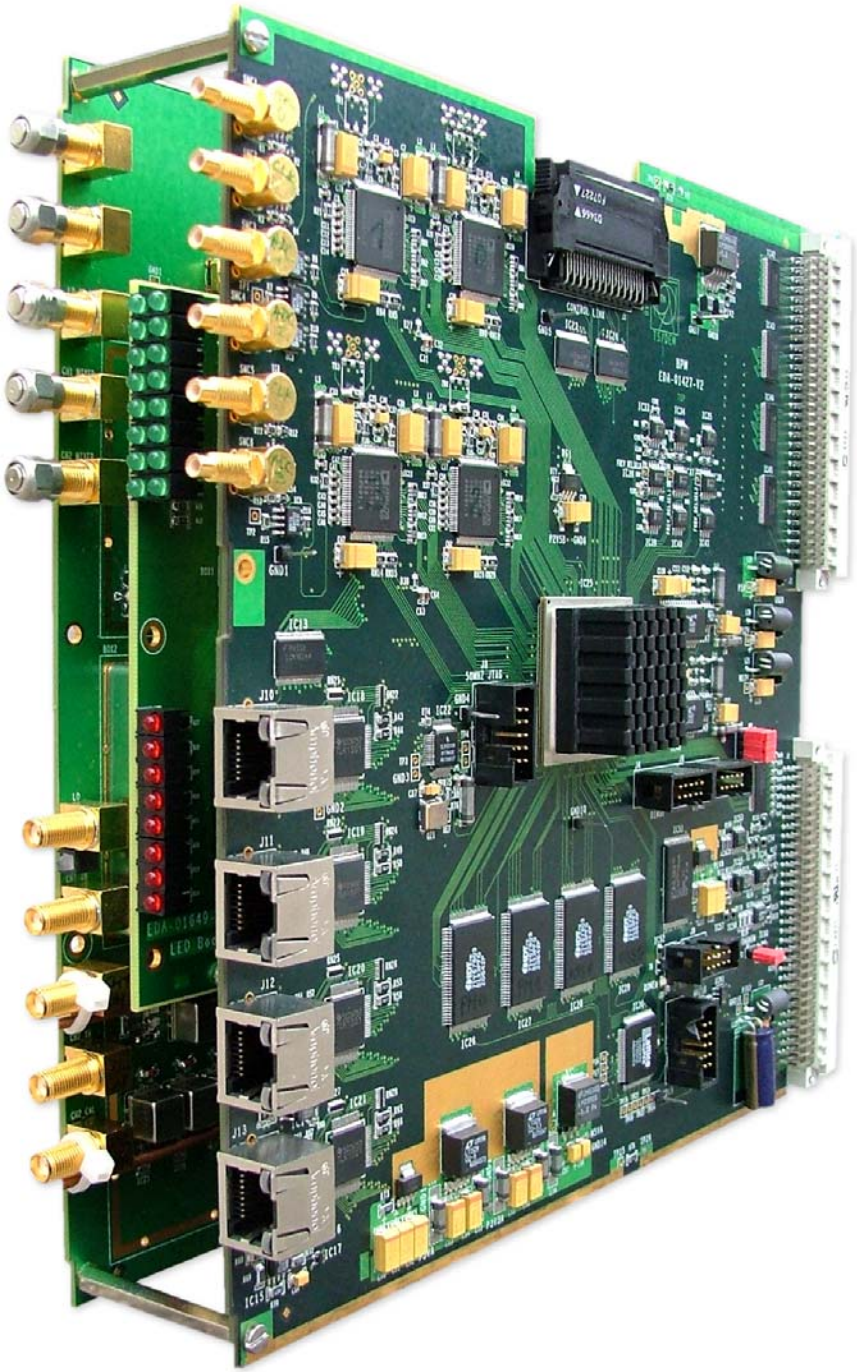

Measured noise performance

40MHz sampling clock, 256k samples

- Input of the ADC terminated by 100 Ohms: RMS noise ~1.7 bits

- With full RF front-end: RMS noise ~2.7 bits

(Analog IQ demodulator, 2x ADA4938-1 DC coupled ADC drivers, 60MHz 5th order Gaussian type low-pass, differentially connected by 50 Ohm coax cables to the ADC on the digital card).

What is your experience, could you get more out of it?

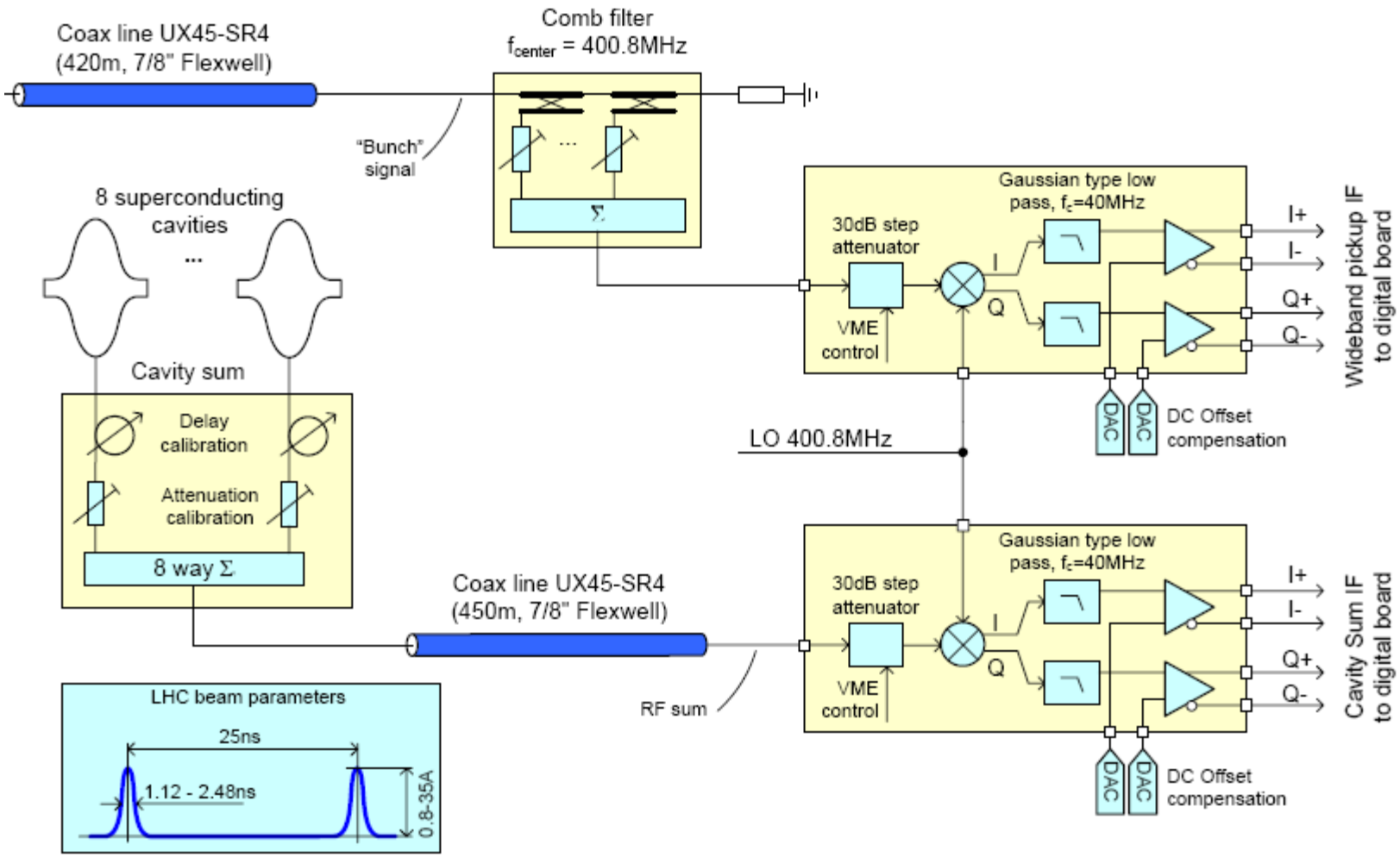
Coax line UX45-SR4
(420m, 7/8" Flexwell)
Comb filter
f_{center} = 400.8MHz
"Bunch" signal
8 superconducting cavities
...
Cavity sum
Delay calibration
Attenuation calibration
8 way Σ
Coax line UX45-SR4
(450m, 7/8" Flexwell)
RF sum
LHC beam parameters
25ns
1.12 - 2.48ns
0.8-35A
Gaussian type low pass, f_c=40MHz
30dB step attenuator
VME control
I
Q
I+
I-
Q+
Q-
Wideband pickup IF to digital board
DAC
DAC
DC Offset compensation
LO 400.8MHz
Gaussian type low pass, f_c=40MHz
30dB step attenuator
VME control
I
Q
I+
I-
Q+
Q-
Cavity Sum IF to digital board
DAC
DAC
DC Offset compensation

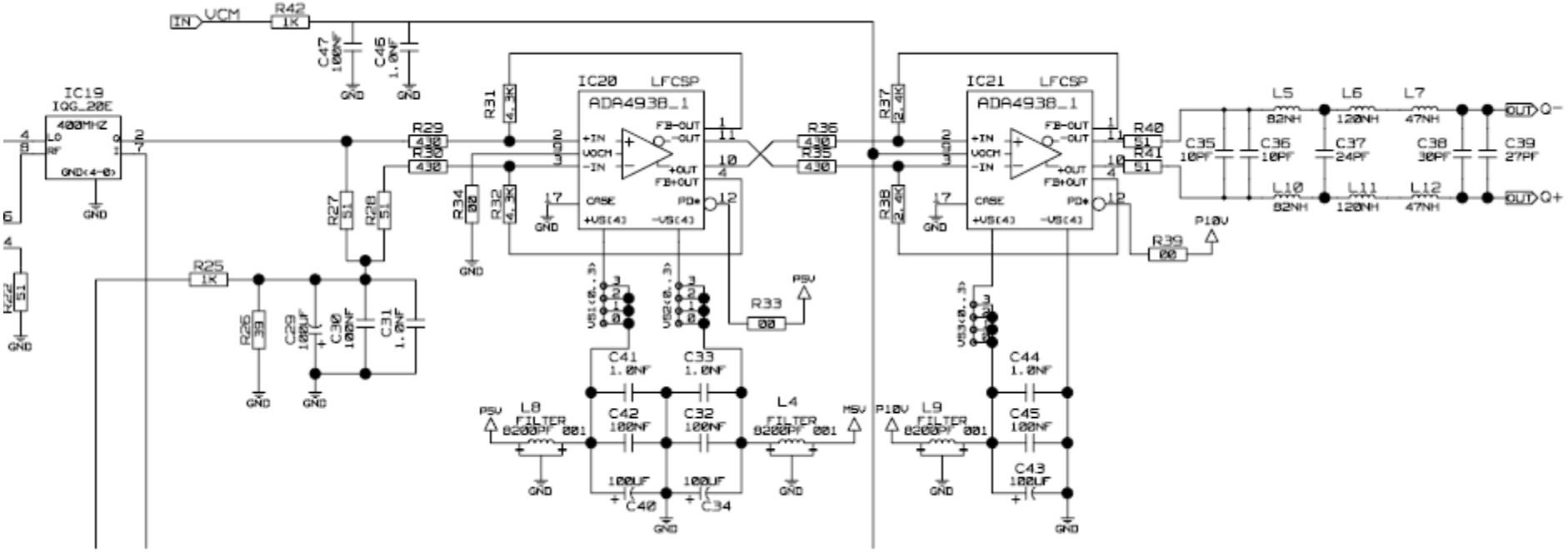
IN
VCM
R42
1K
C47
100NF
C46
1.0NF
GND
IC19
IQG_20E
400MHZ
LO
RF
Q
I
GND(4-0)
R29
430
R30
430
R31
4.3K
R32
4.3K
R34
00
R27
51
R28
51
R25
1K
R26
39
C29
100UF
C30
100NF
C31
1.0NF
R22
51
IC20
LFCSP
ADA4938_1
+IN
VOCM
-IN
FB-OUT
-OUT
+OUT
FB+OUT
CASE
PD*
+VS(4)
-VS(4)
R36
430
R35
430
R33
00
PSV
C41
1.0NF
C33
1.0NF
C42
100NF
C32
100NF
100UF
C40
C34
L8
FILTER
8200PF 001
L4
FILTER
8200PF 001
MSV
R37
2.4K
R38
2.4K
IC21
LFCSP
ADA4938_1
R40
51
R41
51
R39
00
P10V
C44
1.0NF
C45
100NF
C43
100UF
L9
FILTER
8200PF 001
L5
82NH
L6
120NH
L7
47NH
L10
82NH
L11
120NH
L12
47NH
C35
10PF
C36
10PF
C37
24PF
C38
30PF
C39
27PF
OUT
Q-
Q+

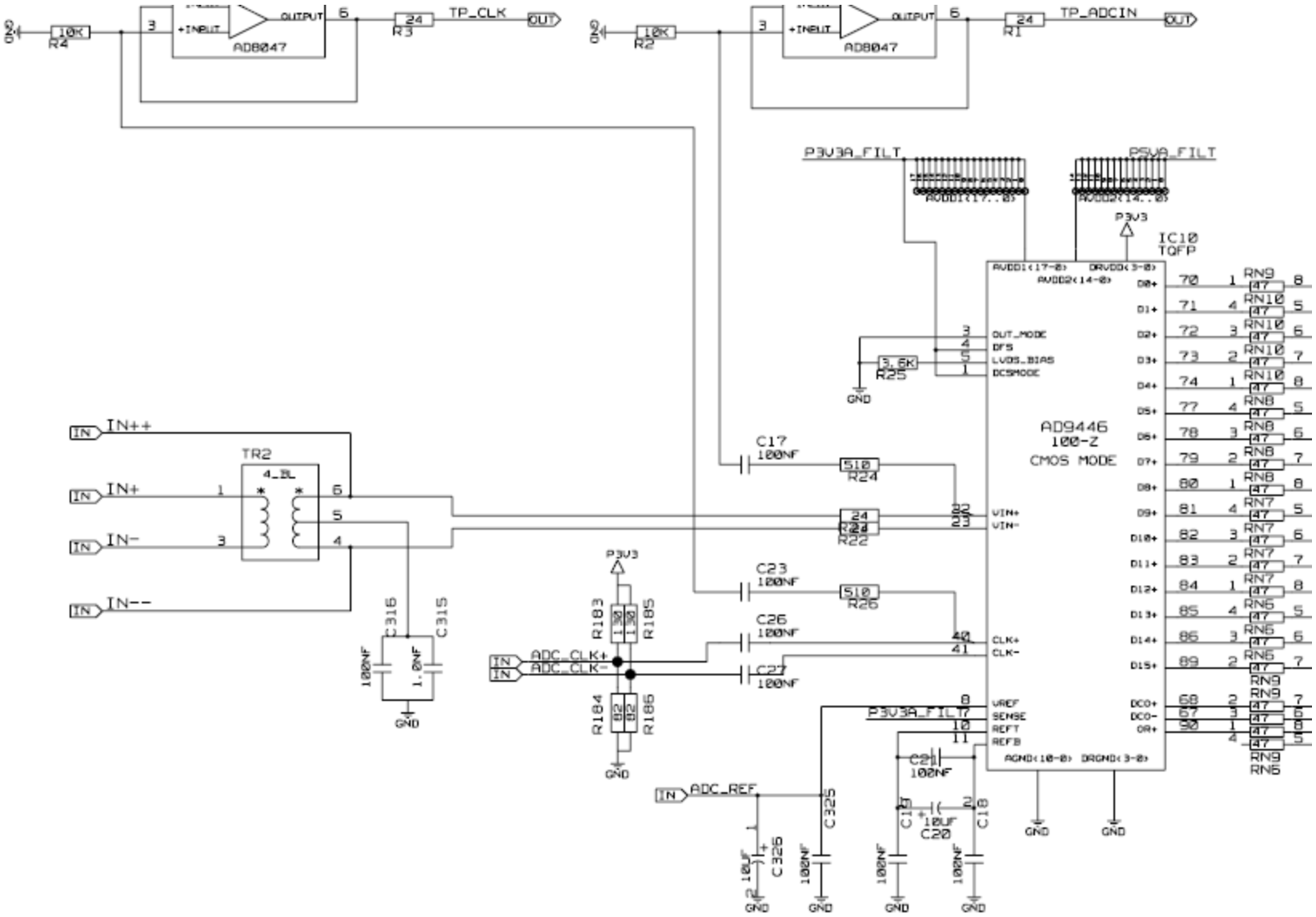
AD8047
TP_CLK
TP_ADCIN
P3V3A_FILT
P5VA_FILT
P3V3
IC10
TQFP
AD9446
100-Z
CMOS MODE
OUT_MODE
DFS
LVDS_BIAS
DCSMODE
VIN+
VIN-
CLK+
CLK-
VREF
SENSE
REFT
REFB
ADC_CLK+
ADC_CLK-
ADC_REF
IN++
IN+
IN-
IN--
TR2
GND