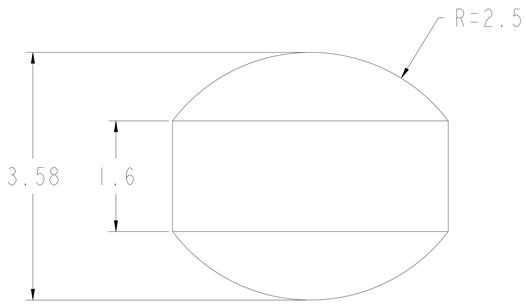

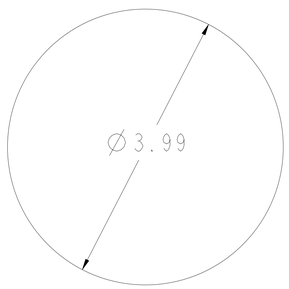

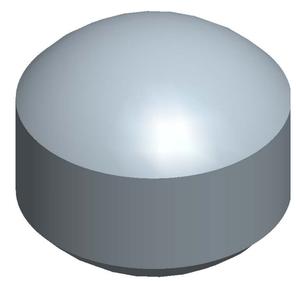

SCALE 30.000

SAMPLE SHAPE FOR DOUBLE-TOROID NON-ENCAPSULATING GASKET

ALL DIMENSIONS ARE IN mm