SNAP Gas Loading Hydrogen Intensifier

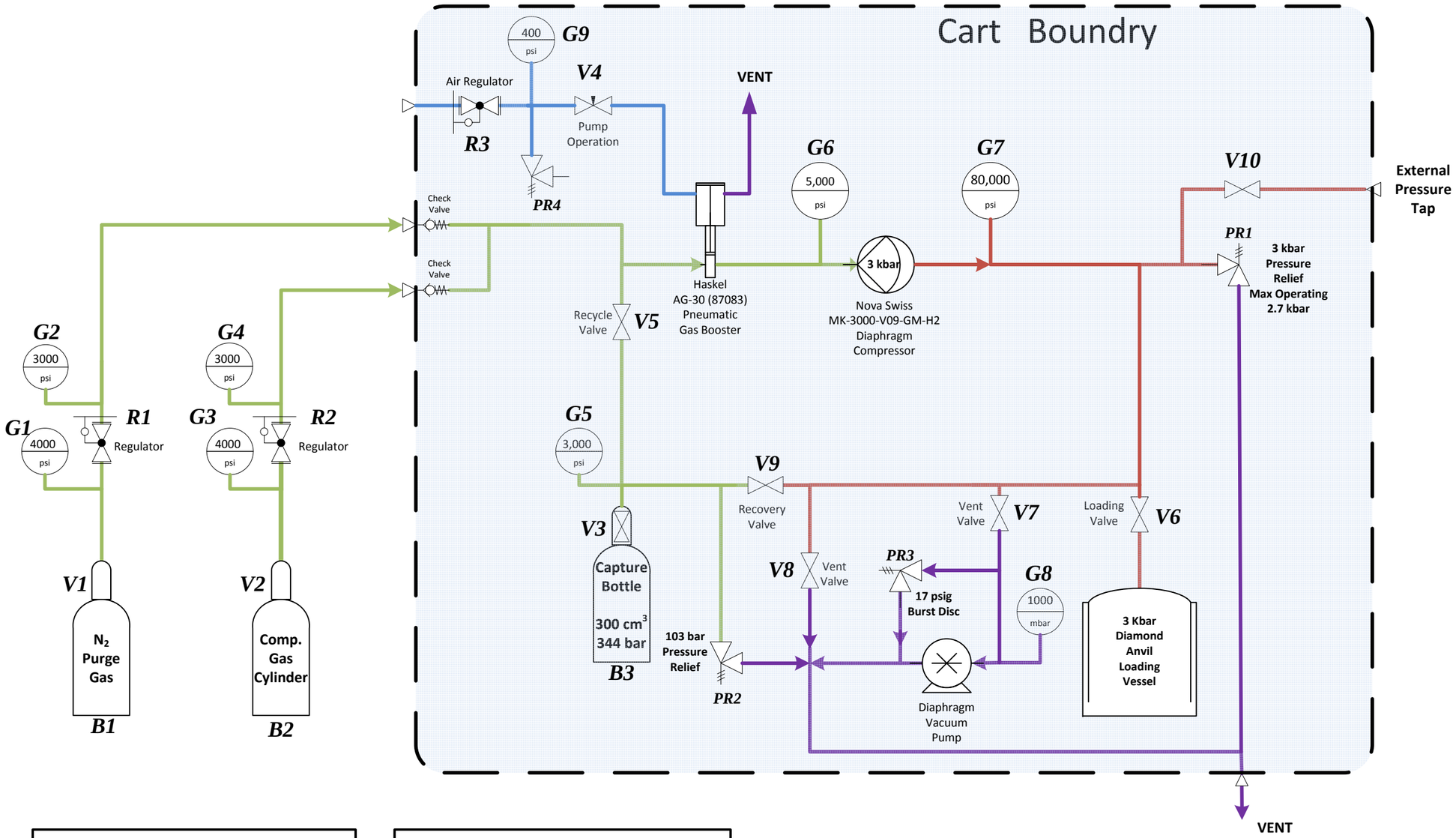

Gases of interest
1. Hydrogen (6L Aluminum Bottle)
2. Helium
3. Methane
4. Neon
5. Nitrogen
6. Argon
7. Krypton
8. Xenon

Legend:

- 103 bar Max
- 3 kbar Max
- Low Pressure Vent
- Pneumatic Supply

Date: 06/28/2016
By: Mark Loguillo & Doug Armitage